STANDARDS OF THE

TUBULAR EXCHANGER

MANUFACTURERS ASSOCIATION



EIGHTH EDITION

TUBULAR EXCHANGER MANUFACTURERS ASSOCIATION, INC.
25 North Broadway
Tarrytown, New York 10591
Richard C. Byrne, Secretary
www.tema.org

NO WARRANTY
EXPRESSED OR IMPLIED

The Standards herein are recommended by The Tubular Exchanger Manufacturers Association, Inc. to assist users, engineers and designers who specify, design and install tubular exchangers. These standards are based upon sound engineering principles, research and field experience in the manufacture, design, installation and use of tubular exchangers. These standards may be subject to revision as further investigation or experience may show is necessary or desirable. Nothing herein shall constitute a warranty of any kind, expressed or implied, and warranty responsibility of any kind is expressly denied.

© Copyright 1968, 1970, 1972, 1974, 1978, 1986, 1987, 1988, 1999
Tubular Exchanger Manufacturers Association, Inc.

TEMA is a trademark of the Tubular Exchanger Manufacturers Association, Inc.

This document may not be copied, photocopied, reproduced, translated, modified or reduced to any electronic medium or machine-readable form in whole or in part, without prior written consent of the Tubular Exchanger Manufacturers Association, Inc.

ALL RIGHTS RESERVED

CONTRIBUTING MEMBERS

TUBULAR EXCHANGER MANUFACTURERS ASSOCIATION, INC.

Comprising Manufacturers of Various Types
of Shell and Tube Heat Exchanger Equipment

API Heat Transfer, Inc. ..... 2777 Walden Avenue
Buffalo, NY 14225

Cust-O-Fab, Inc. ..... 8888 West 21st Street
Sand Springs, OK 74063

Energy Exchanger Company ..... 1844 N. Garnett Road
Tulsa, OK 74116

Engineers and Fabricators Company ..... 3501 West 11th Street
Houston, TX 77008-60011

Fabsco Shell and Tube, L.L.C. ..... P.O. Box 988
Sapulpa, OK 74066

Graham Corporation ..... 20 Florence Avenue
Batavia, NY 14020

Heat Transfer Equipment Co. ..... P.O. Box 580638
Tulsa, OK 74158

Hughes-Anderson Heat Exchangers, Inc. ..... 1001 N. Fulton Avenue
Tulsa, OK 74115

ITT Standard, ITT Fluid Technology Corporation ..... P.O. Box 1102
Buffalo, NY 14227

Joseph Oat Corporation ..... 2500 Broadway
Camden, NJ 08104

Manning and Lewis Engineering Company ..... 675 Rahway Avenue
Union, NJ 07083

Nooter Corporation ..... P.O. Box 451
St. Louis, MO 63166

Ohmstede, Inc. ..... 825 North Main Street
Beaumont, TX 77701

RAS Process Equipment, Inc. ..... 324 Meadowbrook Road
Robbinsville, NJ 08691

Southern Heat Exchanger Corporation ..... P.O. Box 1850
Tuscaloosa, AL 35403

Struthers Industries, Inc. ..... 1500 34th Street
Gulfport, MS 39501

Wiegmann and Rose ..... P.O. Box 4187
Subsidiary of Xchanger Mfg. Corp. Oakland, CA 94614

Yuba Heat Transfer ..... P.O. Box 3158
A Division of Connell Limited Partnership Tulsa, OK 74101

TECHNICAL COMMITTEE
OF THE
TUBULAR EXCHANGER MANUFACTURERS ASSOCIATION

Ken O'Connor ..... API Heat Transfer, Inc.

Doug Werhane ..... Cust-O-Fab, Inc.

Ken Fultz ..... Energy Exchanger Company

Cris Smelley ..... Engineers and Fabricators Company

Philip Marks ..... Graham Corporation

Monte Davis ..... Heat Transfer Equipment Company

Jim Harrison ..... Hughes-Anderson Heat Exchangers, Inc.

Nick Tranquilli ..... ITT Standard

Michael Holtz ..... Joseph Oat Corporation

Ted Rapczynski ..... Manning and Lewis Engineering Co.

Steve Meierotto ..... Nooter Corporation

Michael Tracy ..... Ohmstede, Inc.
Russell Miller

Todd Allen ..... Southern Heat Exchanger Corp.
Dan Stenman

Gary L. Berry ..... Struthers Industries, Inc.

Jack E. Logan ..... Wiegmann and Rose
Subsidiary of Xchanger Mfg. Corp.

Larry Brumbaugh ..... Yuba Heat Transfer
A Division of Connell Limited Partnership

PREFACE

Eighth Edition - 1999

The Eighth Edition of the TEMA Standards was prepared by the Technical Committee of the Tubular Exchanger Manufacturers Association. A compilation of previously proven information, along with new additions to the Flow Induced Vibration, Flexible Shell Elements and Tubesheet Design sections is presented for your practical use.

Design methods for Floating Head Backing Devices have also been added and the scope has been changed to accommodate a larger range of sizes and pressures. Metric units and tables have been included wherever possible. Suggested methods have been included for support and lifting lug design in the RGP section.

This edition of the TEMA Standards is dedicated to the memory of Wayne Schaefer of the Nooter Corporation for his years of dedicated service to the TEMA Technical Committee.

The Editor also wishes to acknowledge the contributions to the Eighth Edition by the following past members of the Technical Committee: Victor J. Stachura, Joseph H. Kissel, Robert C. Moscicki and Harry W. Saultz.

Jim Harrison EDITOR

CONTENTS

Section	Symbol & Paragraph		
		MEMBERSHIP LIST	iii
		TECHNICAL COMMITTEE	iv
		PREFACE	v
		NOTES TO USERS	viii
1	N	NOMENCLATURE	
	1	Size Numbering and Type Designation—Recommended Practice	1
	2	Nomenclature of Heat Exchanger Components	3
2	F	FABRICATION TOLERANCES	
	1	External Dimensions, Nozzle and Support Locations	6
	2	Recommended Fabrication Tolerances	7
	3	Tubesheets, Partitions, Covers, and Flanges	8
	4	Flange Face Imperfections	9
3	G	GENERAL FABRICATION AND PERFORMANCE INFORMATION	
	1	Shop Operation	13
	2	Inspection	13
	3	Nameplates	13
	4	Drawings and ASME Code Data Reports	13
	5	Guarantees	14
	6	Preparation of Heat Exchangers for Shipment	15
	7	General Construction Features of TEMA Standard Heat Exchangers	15
4	E	INSTALLATION, OPERATION, AND MAINTENANCE	
	1	Performance of Heat Exchangers	17
	2	Installation of Heat Exchangers	17
	3	Operation of Heat Exchangers	18
	4	Maintenance of Heat Exchangers	19
5	RCB	MECHANICAL STANDARD TEMA CLASS RCB HEAT EXCHANGERS	
	1	Scope and General Requirements	23
	2	Tubes	27
	3	Shells and Shell Covers	30
	4	Baffles and Support Plates	31
	5	Floating End Construction	38
	6	Gaskets	43
	7	Tubesheets	45
	8	Flexible Shell Elements	75
	9	Channels, Covers, and Bonnets	88
	10	Nozzles	91
	11	End Flanges and Bolting	93
6	V	FLOW INDUCED VIBRATION	
	1	Scope and General	95
	2	Vibration Damage Patterns	95
	3	Failure Regions	95
	4	Dimensionless Numbers	96
	5	Natural Frequency	97
	6	Axial Tube Stress	104
	7	Effective Tube Mass	104
	8	Damping	107

CONTENTS

Section	Symbol & Paragraph		
6	V		FLOW INDUCED VIBRATION (continued)
		9	Shell Side Velocity Distribution 109
		10	Estimate of Critical Flow Velocity 112
		11	Vibration Amplitude 114
		12	Acoustic Vibration 116
		13	Design Considerations 121
		14	Selected References 122
7	T		THERMAL RELATIONS
		1	Scope and Basic Relations 124
		2	Fouling 125
		3	Fluid Temperature Relations 126
		4	Mean Metal Temperatures of Shell and Tubes 128
8	P		PHYSICAL PROPERTIES OF FLUIDS
		1	Fluid Density 150
		2	Specific Heat 150
		3	Heat Content of Petroleum Fractions 151
		4	Thermal Conductivity 151
		5	Viscosity 151
		6	Critical Properties 152
		7	Properties of Gas and Vapor Mixtures 152
		8	Selected References 153
9	D		GENERAL INFORMATION
			(See detailed Table of Contents) 183
10	RGP		RECOMMENDED GOOD PRACTICE
	G-7.11		Horizontal Vessel Supports 253
	G-7.12		Vertical Vessel Supports 267
	G-7.2		Lifting Lugs 269
	G-7.3		Wind and Seismic Design 273
	RCB-2		Plugging Tubes in Tube Bundle 273
	RCB-4		Entrance and Exit Areas 274
	RCB-6		Gaskets 279
	RCB-7		Tubesheets 279
	RCB-9		Channels, Covers, and Bonnets 280
	RCB-10		Nozzles 281
	RCB-11		End Flanges and Bolting 281
	T-2		Fouling 283
			INDEX 291

NOTES TO USERS OF

THE TEMA STANDARDS

Three classes of Mechanical Standards, R,C and B, reflecting acceptable designs for various service applications are presented. The user should refer to the definition of each class and choose the one that best fits the specific need.

Corresponding subject matter in the three Mechanical Standards is covered by paragraphs identically numbered except for the prefix letter. Paragraph numbers preceded by RCB indicates that all three classes are identical. Any reference to a specific paragraph must be preceded by the class designation.

The Recommended Good Practice section has been prepared to assist the designer in areas outside the scope of the basic Standards. Paragraphs in the Standards having additional information in the RGP section are marked with an asterisk (*). The reference paragraph in the RGP section has the identical paragraph number, but with an "RGP" prefix.

It is the intention of the Tubular Exchanger Manufacturers Association that this edition of its Standards may be used beginning with the date of issuance, and that its requirements supersede those of the previous edition six months from such date of issuance, except for heat exchangers contracted for prior to the end of the six month period. For this purpose the date of issuance is June 1, 1999.

Questions on interpretation of the TEMA Standards should be formally addressed to the Secretary at TEMA 25 North Broadway, Tarrytown, NY 10591. Questions requiring development of new or revised technical information will only be answered through an addendum or a new edition of the Standards.

Upon agreement between purchaser and fabricator, exceptions to TEMA requirements are acceptable. An exchanger may still be considered as meeting TEMA requirements as long as the exception is documented.

N-1 SIZE NUMBERING AND TYPE DESIGNATION--RECOMMENDED PRACTICE

It is recommended that heat exchanger size and type be designated by numbers and letters as described below.

N-1.1 SIZE

Sizes of shells (and tube bundles) shall be designated by numbers describing shell (and tube bundle) diameters and tube lengths, as follows:

N-1.11 NOMINAL DIAMETER

The nominal diameter shall be the inside diameter of the shell in inches (mm), rounded off to the nearest integer. For kettle reboilers the nominal diameter shall be the port diameter followed by the shell diameter, each rounded off to the nearest integer.

N-1.12 NOMINAL LENGTH

The nominal length shall be the tube length in inches (mm). Tube length for straight tubes shall be taken as the actual overall length. For U-tubes the length shall be taken as the approximate straight length from end of tube to bend tangent.

N-1.2 TYPE

Type designation shall be by letters describing stationary head, shell (omitted for bundles only), and rear head, in that order, as indicated in Figure N-1.2.

N-1.3 TYPICAL EXAMPLES

N-1.31

Split-ring floating head exchanger with removable channel and cover, single pass shell, 23-1/4" (591 mm) inside diameter with tubes 16'(4877 mm) long. SIZE 23-192 (591-4877) TYPE AES.

N-1.32

U-tube exchanger with bonnet type stationary head, split flow shell, 19" (483 mm) inside diameter with tubes 7'(2134 mm) straight length. SIZE 19-84 (483-2134) TYPE BGU.

N-1.33

Pull-through floating head kettle type reboiler having stationary head integral with tubesheet, 23" (584 mm) port diameter and 37" (940 mm) inside shell diameter with tubes 16'(4877 mm) long. SIZE 23/37-192 (584/940 - 4877) TYPE CKT.

N-1.34

Fixed tubesheet exchanger with removable channel and cover, bonnet type rear head, two pass shell, 33-1/8" (841 mm) inside diameter with tubes 8'(2438 mm) long. SIZE 33-96 (841-2438) TYPE AFM.

N-1.35

Fixed tubesheet exchanger having stationary and rear heads integral with tubesheets, single pass shell, 17" (432 mm) inside diameter with tubes 16'(4877 mm) long. SIZE 17-192 (432-4877) TYPE NEN.

N-1.4 SPECIAL DESIGNS

Special designs are not covered and may be described as best suits the manufacturer. For example, a single tube pass, fixed tubesheet exchanger with conical heads may be described as "TYPE BEM with Conical Heads". A pull-through floating head exchanger with an integral shell cover may be described as "TYPE AET with Integral Shell Cover".

FIGURE N-1.2

	FRONT END STATIONARY HEAD TYPES
A	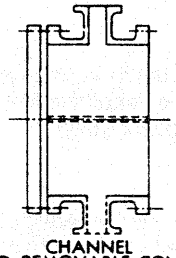 CHANNEL AND REMOVABLE COVER
B	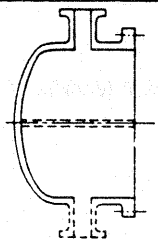 BONNET (INTEGRAL COVER)
C	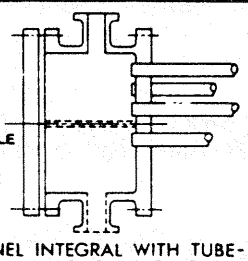 CHANNEL INTEGRAL WITH TUBESHEET AND REMOVABLE COVER
N	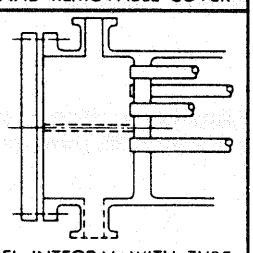 CHANNEL INTEGRAL WITH TUBESHEET AND REMOVABLE COVER
D	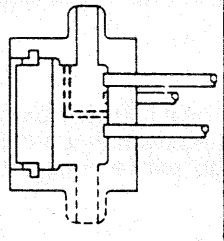 SPECIAL HIGH PRESSURE CLOSURE

	SHELL TYPES
E	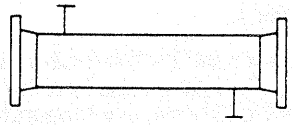 ONE PASS SHELL
F	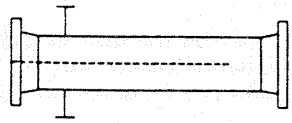 TWO PASS SHELL WITH LONGITUDINAL BAFFLE
G	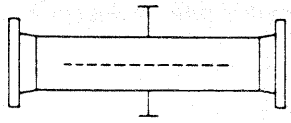 SPLIT FLOW
H	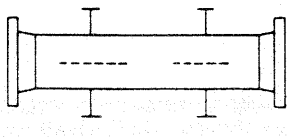 DOUBLE SPLIT FLOW
J	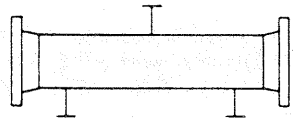 DIVIDED FLOW
K	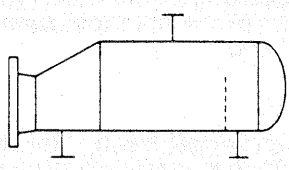 KETTLE TYPE REBOILER
X	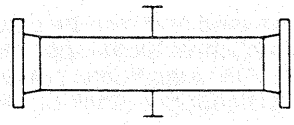 CROSS FLOW

	REAR END HEAD TYPES
L	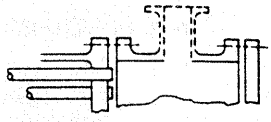 FIXED TUBESHEET LIKE "A" STATIONARY HEAD
M	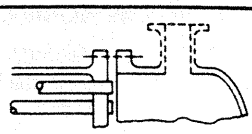 FIXED TUBESHEET LIKE "B" STATIONARY HEAD
N	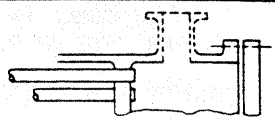 FIXED TUBESHEET LIKE "N" STATIONARY HEAD
P	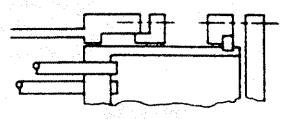 OUTSIDE PACKED FLOATING HEAD
S	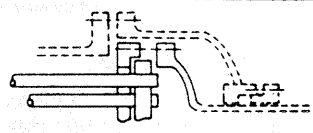 FLOATING HEAD WITH BACKING DEVICE
T	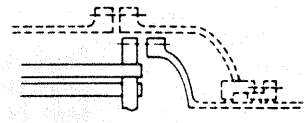 PULL THROUGH FLOATING HEAD
U	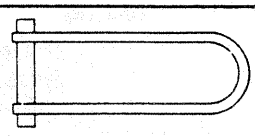 U-TUBE BUNDLE
W	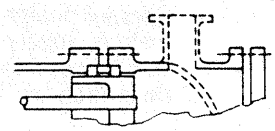 EXTERNALLY SEALED FLOATING TUBESHEET

N-2 NOMENCLATURE OF HEAT EXCHANGER COMPONENTS

For the purpose of establishing standard terminology, Figure N-2 illustrates various types of heat exchangers. Typical parts and connections, for illustrative purposes only, are numbered for identification in Table N-2.

TABLE N-2

1. Stationary Head-Channel
2. Stationary Head-Bonnet
3. Stationary Head Flange-Channel or Bonnet
4. Channel Cover
5. Stationary Head Nozzle
6. Stationary Tubesheet
7. Tubes
8. Shell
9. Shell Cover
10. Shell Flange-Stationary Head End
11. Shell Flange-Rear Head End
12. Shell Nozzle
13. Shell Cover Flange
14. Expansion Joint
15. Floating Tubesheet
16. Floating Head Cover
17. Floating Head Cover Flange
18. Floating Head Backing Device
19. Split Shear Ring
20. Slip-on Backing Flange
21. Floating Head Cover-External
22. Floating Tubesheet Skirt
23. Packing Box
24. Packing
25. Packing Gland
26. Lantern Ring
27. Tierods and Spacers
28. Transverse Baffles or Support Plates
29. Impingement Plate
30. Longitudinal Baffle
31. Pass Partition
32. Vent Connection
33. Drain Connection
34. Instrument Connection
35. Support Saddle
36. Lifting Lug
37. Support Bracket
38. Weir
39. Liquid Level Connection
40. Floating Head Support

FIGURE N-2

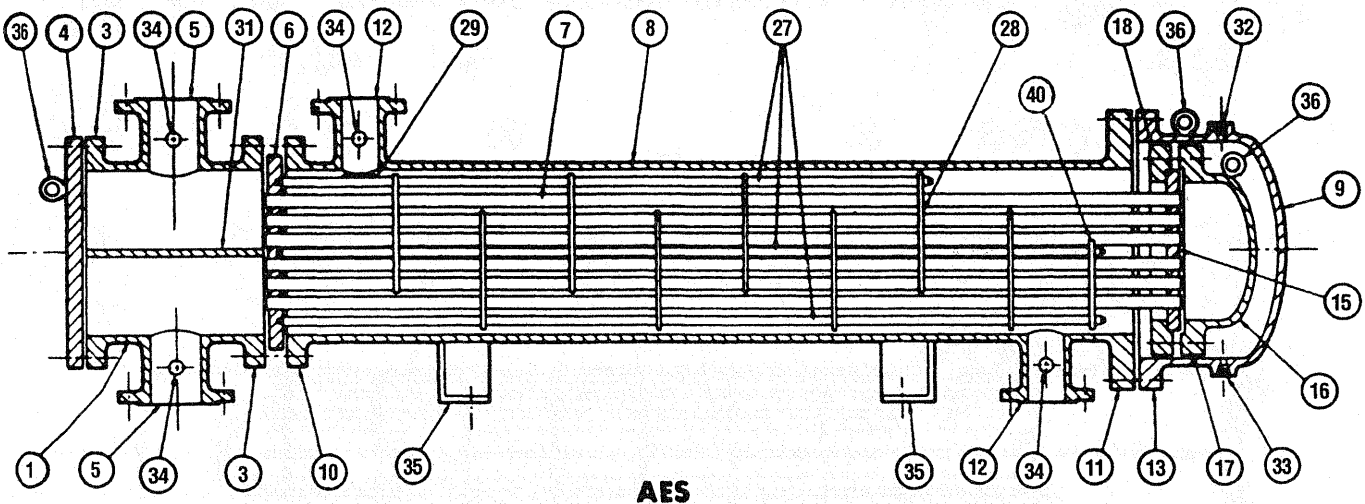

AES

FIGURE N-2 (continued)

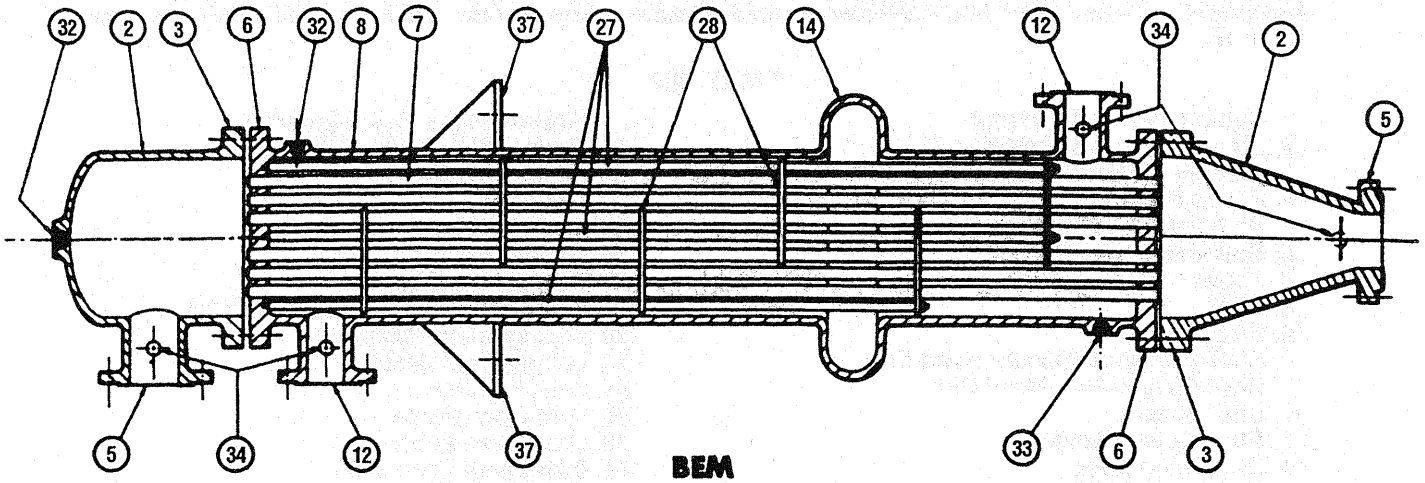

BEM

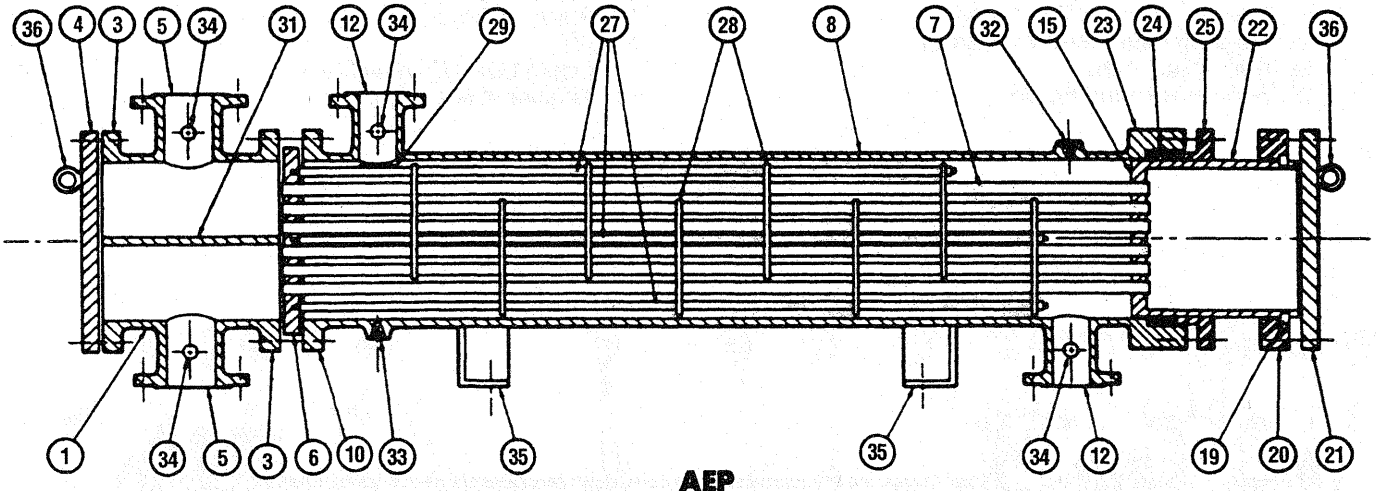

AEP

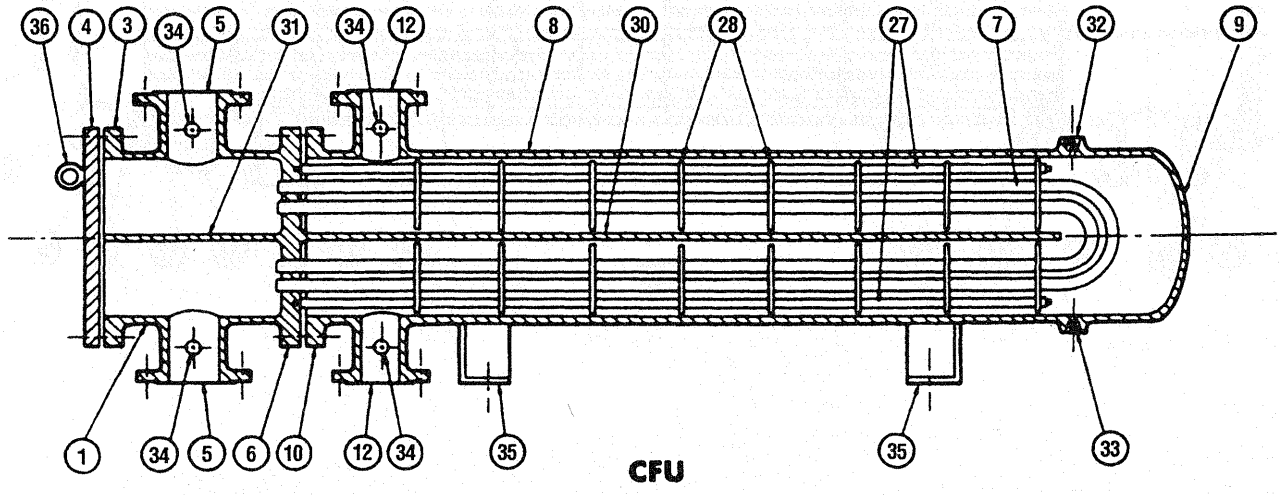

CFU

FIGURE N-2 (continued)

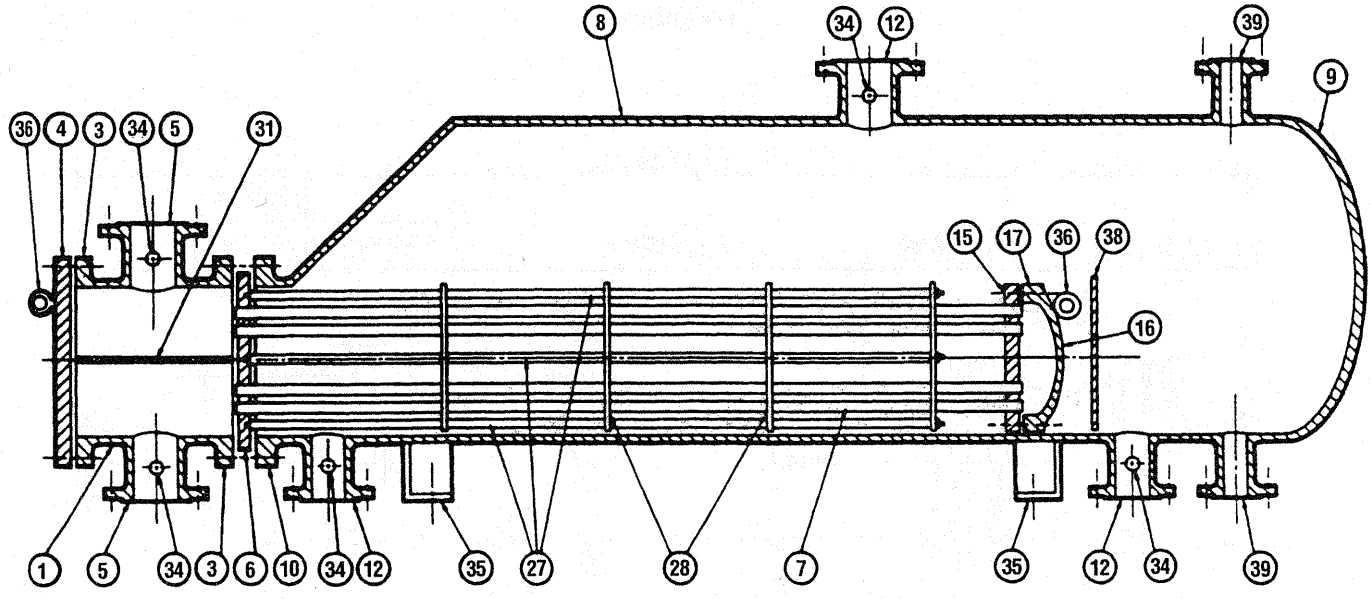

AKT

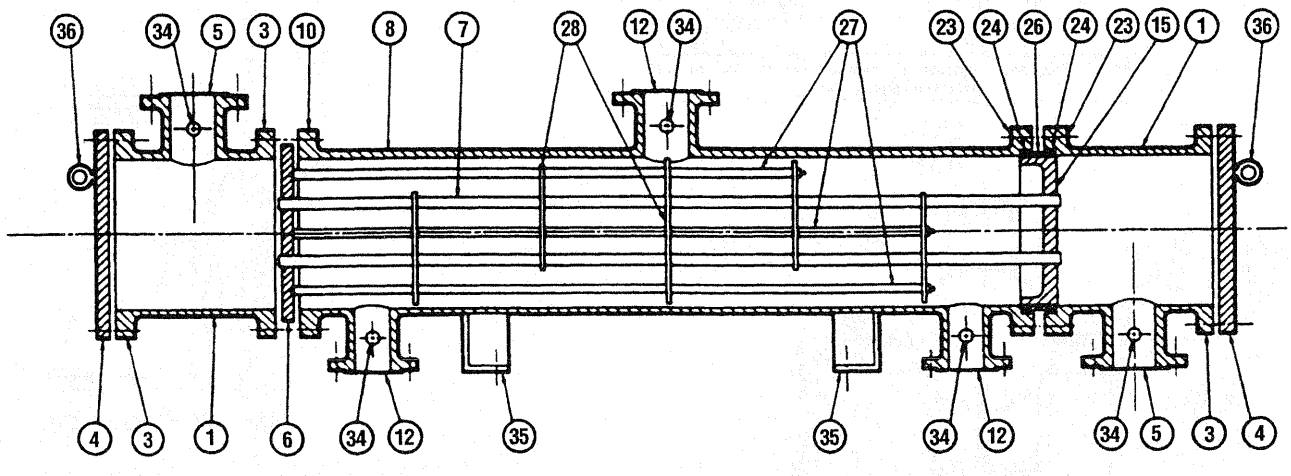

AJW

F-1 EXTERNAL DIMENSIONS, NOZZLE AND SUPPORT LOCATIONS

Standard tolerances for process flow nozzles and support locations and projections are shown in Figure F-1. Dimensions in ( ) are millimeters.

FIGURE F-1

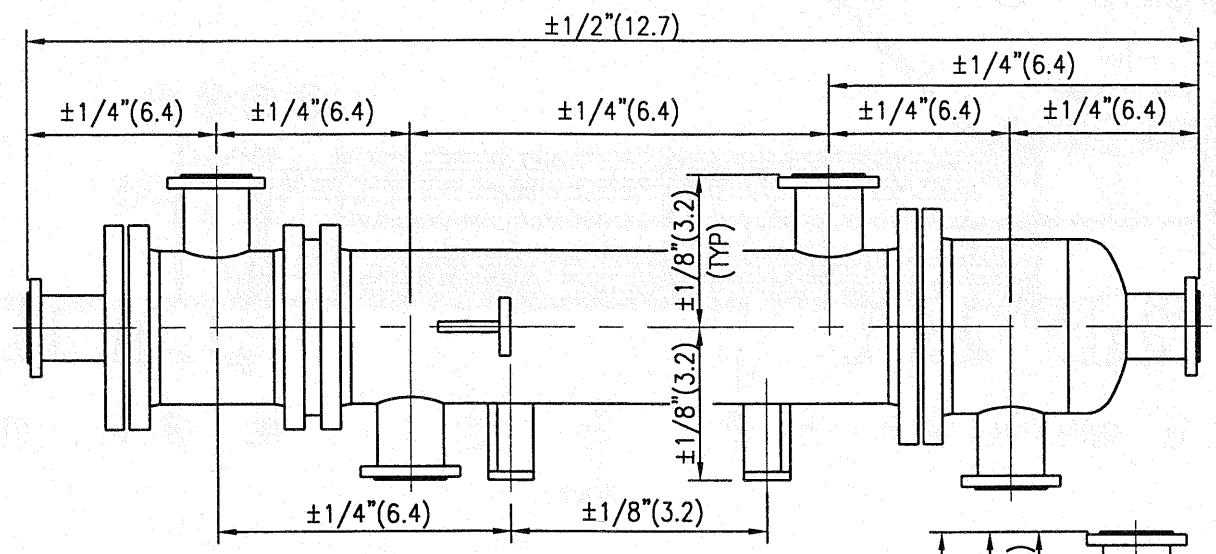

NOMINAL NOZZLE SIZE	G MAX
2"–4" INCLUSIVE	1/16"(1.6)
6"–12" INCLUSIVE	3/32"(2.4)
14"–36" INCLUSIVE	3/16"(4.8)
OVER 36"	1/4"(6.4)

NOTE: This table applies to nozzles connecting to external piping only.

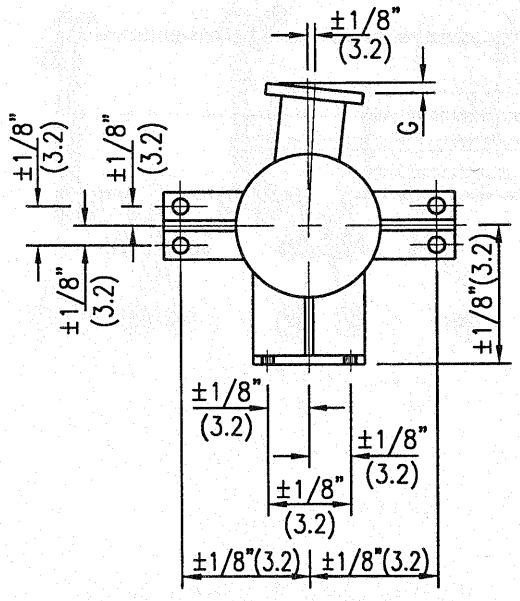

CONNECTION NOZZLE ALIGNMENT AND SUPPORT TOLERANCES

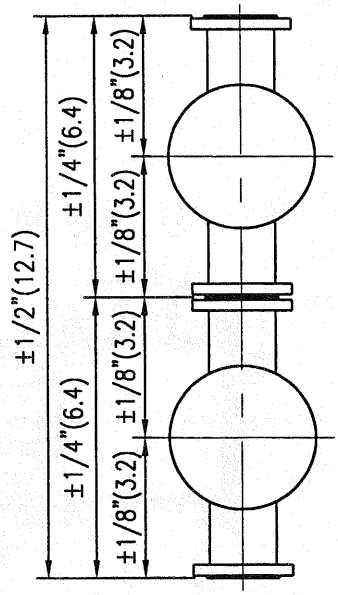

STACKED EXCHANGERS

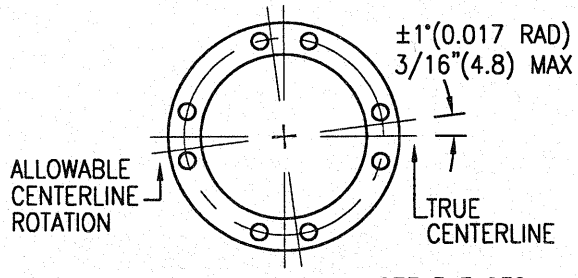

ROTATIONAL TOLERANCE ON NOZZLE FACES AT BOLT CIRCLE

F-2 RECOMMENDED FABRICATION TOLERANCES

Fabrication tolerances normally required to maintain process flow nozzle and support locations are shown in Figure F-2. These tolerances may be adjusted as necessary to meet the tolerances shown in Figure F-1. Dimensions in ( ) are millimeters.

FIGURE F-2

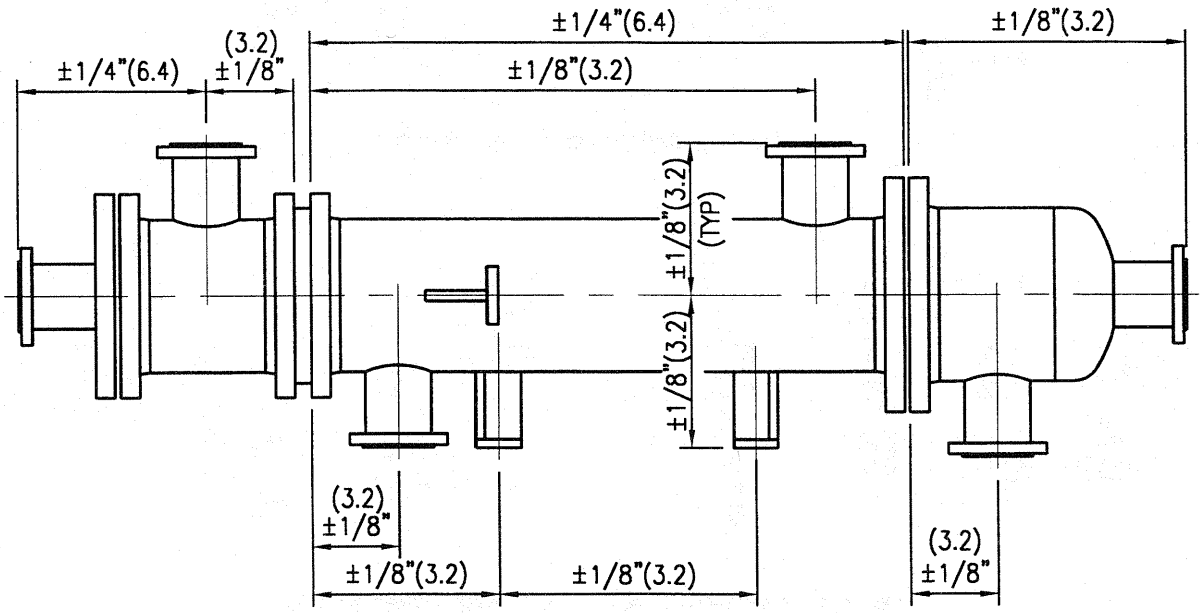

F-3 TUBESHEETS, PARTITIONS, COVERS AND FLANGES

The standard clearances and tolerances applying to tubesheets, partitions, covers and flanges are shown in Figure F-3. Dimensions in ( ) are millimeters.

FIGURE F-3

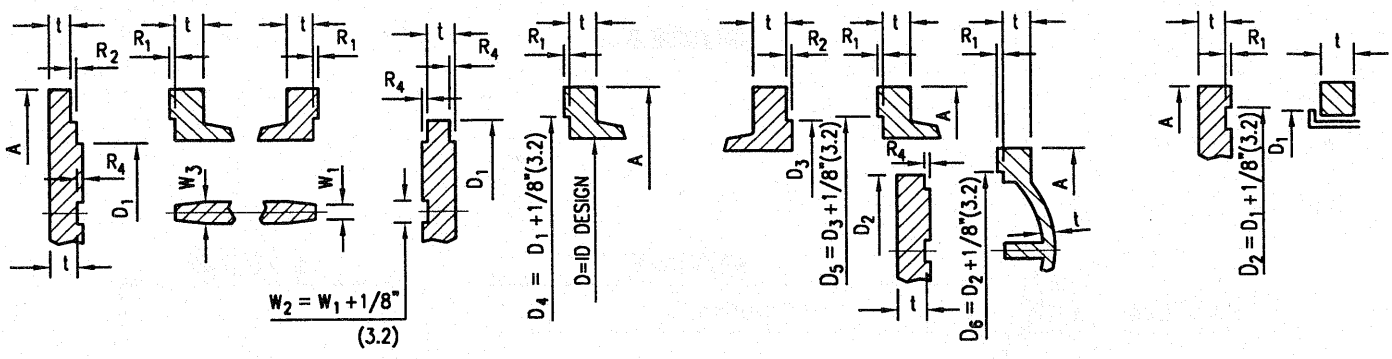

STANDARD CONFINED JOINT CONSTRUCTION

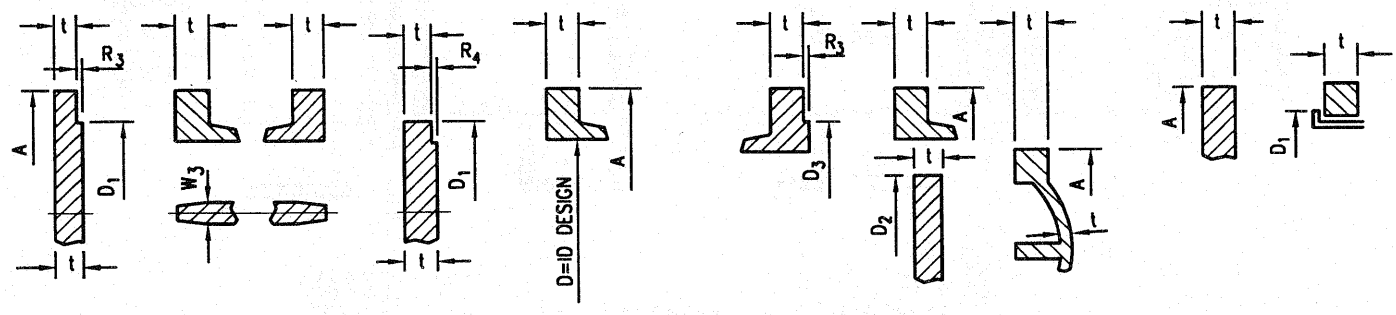

STANDARD UNCONFINED PLAIN FACE JOINT CONSTRUCTION

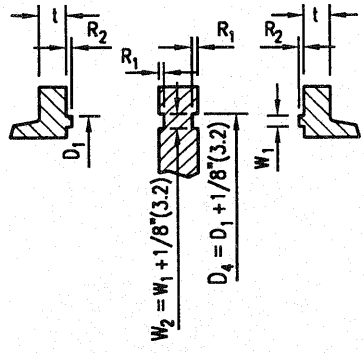

ALTERNATE TONGUE AND GROOVE JOINT

DIMENSIONS	TOLERANCES
A	+1/4" -1/8" (+6.4 -3.2)
$D_1, D_2, D_3, D_4, D_5, D_6$	±1/32" (±0.8)
t	±1/16" (±1.6)
R_1 = 3/16" (4.8)	+0" -1/32" (+0 -0.8)
R_2=1/4" (6.4) R_3=1/4" (6.4)	+1/32" -0" (+0.8 -0)
R_4= 3/16" (4.8)	-1/32" (-0.8) (SEE NOTE 1)
W_1, W_2, W_3	±1/32" (±0.8)

1. SECTION 2 IS NOT INTENDED TO PROHIBIT UNMACHINED TUBESHEET FACES AND FLAT COVER FACES. THEREFORE NO PLUS TOLERANCE IS SHOWN ON R4.
2. NEGATIVE TOLERANCES SHALL NOT BE CONSTRUED TO MEAN THAT FINAL DIMENSIONS CAN BE LESS THAN THAT REQUIRED BY DESIGN CALCULATIONS.
3. FOR PERIPHERAL GASKETS, "CONFINED" MEANS "CONFINED ON THE OD".
4. DETAILS ARE TYPICAL AND DO NOT PRECLUDE THE USE OF OTHER DETAILS WHICH ARE FUNCTIONALLY EQUIVALENT.
5. FOR UNITS OVER 60" (1524) TO 100" (2540) DIAMETER, TOLERANCES "D" AND "W" MAY BE INCREASED TO ±1/16"(1.6).

FIGURE F-4

PERMISSIBLE IMPERFECTIONS IN FLANGE FACING FINISH FOR RAISED FACE AND LARGE MALE AND FEMALE FLANGES [1,2]

NPS	Maximum Radial Projection of Imperfections Which Are No Deeper Than the Bottom of the Serrations, in. (mm)	Maximum Depth and Radial Projection of Imperfections Which Are Deeper Than the Bottom of the Serrations, in. (mm)
1/2	1/8 (3.2)	1/16 (1.6)
3/4	1/8 (3.2)	1/16 (1.6)
1	1/8 (3.2)	1/16 (1.6)
1-1/4	1/8 (3.2)	1/16 (1.6)
1-1/2	1/8 (3.2)	1/16 (1.6)
2	1/8 (3.2)	1/16 (1.6)
2-1/2	1/8 (3.2)	1/16 (1.6)
3	3/16 (4.8)	1/16 (1.6)
3-1/2	1/4 (6.4)	1/8 (3.2)
4	1/4 (6.4)	1/8 (3.2)
5	1/4 (6.4)	1/8 (3.2)
6	1/4 (6.4)	1/8 (3.2)
8	5/16 (7.9)	1/8 (3.2)
10	5/16 (7.9)	3/16 (4.8)
12	5/16 (7.9)	3/16 (4.8)
14	5/16 (7.9)	3/16 (4.8)
16	3/8 (9.5)	3/16 (4.8)
18	1/2 (12.7)	1/4 (6.4)
20	1/2 (12.7)	1/4 (6.4)
24	1/2 (12.7)	1/4 (6.4)

NOTES:
(1) Imperfections must be separated by at least four times the permissible radial projection.
(2) Protrusions above the serrations are not permitted.

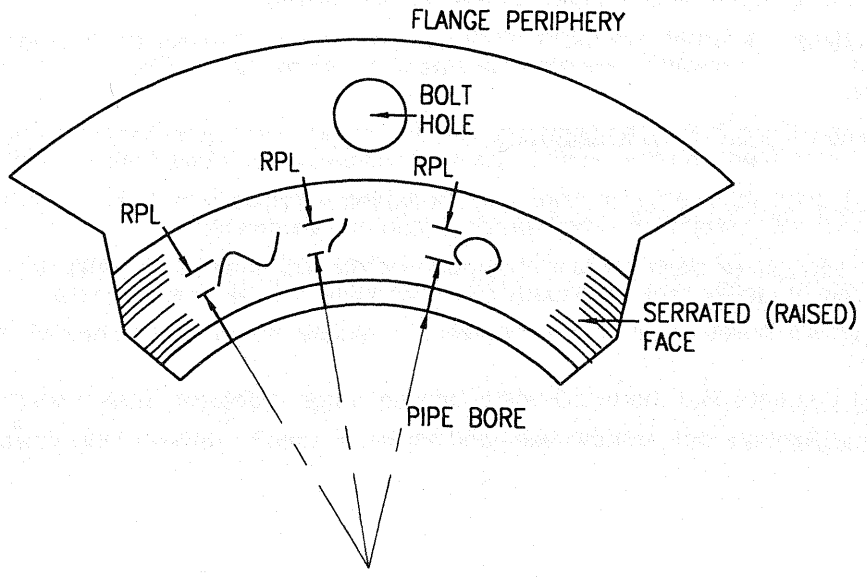

Sketch showing Radial Projected Length (RPL) serrated gasket face damage

DEFINITIONS

1. Baffle is a device to direct the shell side fluid across the tubes for optimum heat transfer.
2. Baffle and Support Plate Tube Hole Clearance is the diametral difference between the nominal tube OD and the nominal tube hole diameter in the baffle or support plate.
3. Consequential Damages are indirect liabilities lying outside the heat exchanger manufacturer's stated equipment warranty obligations.
4. Double Tubesheet Construction is a type of construction in which two (2) spaced tubesheets or equivalent are employed in lieu of the single tubesheet at one or both ends of the heat exchanger.
5. Effective Shell and Tube Side Design Pressures are the resultant load values expressed as uniform pressures used in the determination of tubesheet thickness for fixed tubesheet heat exchangers and are functions of the shell side design pressure, the tube side design pressure, the equivalent differential expansion pressure and the equivalent bolting pressure.
6. Equivalent Bolting Pressure is the pressure equivalent resulting from the effects of bolting loads imposed on tubesheets in a fixed tubesheet heat exchanger when the tubesheets are extended for bolting as flanged connections.
7. Equivalent Differential Expansion Pressure is the pressure equivalent resulting from the effect of tubesheet loadings in a fixed tubesheet heat exchanger imposed by the restraint of differential thermal expansion between shell and tubes.
8. Expanded Tube Joint is the tube-to-tubesheet joint achieved by mechanical or explosive expansion of the tube into the tube hole in the tubesheet.
9. Expansion Joint "J" Factor is the ratio of the spring rate of the expansion joint to the sum of the axial spring rate of the shell and the spring rate of the expansion joint.
10. Flange Load Concentration Factors are factors used to compensate for the uneven application of bolting moments due to large bolt spacing.
11. Minimum and Maximum Baffle and Support Spacings are design limitations for the spacing of baffles to provide for mechanical integrity and thermal and hydraulic effectiveness of the bundle. The possibility for induced vibration has not been considered in establishing these values.
12. Normal Operating Conditions of a shell and tube heat exchanger are the thermal and hydraulic performance requirements generally specified for sizing the heat exchanger.
13. Pulsating Fluid Conditions are conditions of flow generally characterized by rapid fluctuations in pressure and flow rate resulting from sources outside of the heat exchanger.
14. Seismic Loadings are forces and moments resulting in induced stresses on any member of a heat exchanger due to pulse mode or complex waveform accelerations to the heat exchanger, such as those resulting from earthquakes.
15. Shell and Tube Mean Metal Temperatures are the average metal temperatures through the shell and tube thicknesses integrated over the length of the heat exchanger for a given steady state operating condition.
16. Shut-Down Conditions are the conditions of operation which exist from the time of steady state operating conditions to the time that flow of both process streams has ceased.
17. Start-Up Conditions are the conditions of operation which exist from the time that flow of either or both process streams is initiated to the time that steady state operating conditions are achieved.
18. Support plate is a device to support the bundle or to reduce unsupported tube span without consideration for heat transfer.
19. Tubesheet Ligament is the shortest distance between edge of adjacent tube holes in the tube pattern.
20. Welded Tube Joint is a tube-to-tubesheet joint where the tube is welded to the tubesheet.

FIGURE G-5.2
HEAT EXCHANGER SPECIFICATION SHEET

1					Job No.		
2	Customer				Reference No.		
3	Address				Proposal No.		
4	Plant Location				Date	Rev.	
5	Service of Unit				Item No.		
6	Size	Type	(Hor/Vert)		Connected in	Parallel	Series
7	Surf/Unit (Gross/Eff.)		Sq Ft; Shells/Unit		Surf/Shell (Gross/Eff.)		Sq Ft
8	PERFORMANCE OF ONE UNIT						
9	Fluid Allocation			Shell Side		Tube Side	
10	Fluid Name						
11	Fluid Quantity Total		Lb/Hr				
12	Vapor (In/Out)						
13	Liquid						
14	Steam						
15	Water						
16	Noncondensable						
17	Temperature (In/Out)		°F				
18	Specific Gravity						
19	Viscosity, Liquid		Cp				
20	Molecular Weight, Vapor						
21	Molecular Weight, Noncondensable						
22	Specific Heat		Btu / Lb °F				
23	Thermal Conductivity		Btu Ft / Hr Sq Ft °F				
24	Latent Heat		Btu / Lb @ °F				
25	Inlet Pressure		Psia				
26	Velocity		Ft / Sec				
27	Pressure Drop, Allow. /Calc.		Psi	/		/	
28	Fouling Resistance (Min.)		Hr Sq Ft °F / Btu				
29	Heat Exchanged			Btu / Hr:MTD (Corrected)			°F
30	Transfer Rate, Service			Clean			Btu / Hr Sq Ft °F
31	CONSTRUCTION OF ONE SHELL					Sketch (Bundle/Nozzle Orientation)	
32				Shell Side	Tube Side		
33	Design / Test Pressure		Psig	/	/		
34	Design Temp. Max/Min		°F	/	/		
35	No. Passes per Shell						
36	Corrosion Allowance		In				
37	Connections	In					
38	Size &	Out					
39	Rating	Intermediate					
40	Tube No.	OD	In;Thk (Min/Avg)	In;Length	Ft;Pitch	In ◁ 30 △ 60 ▭ 90 ◇ 45	
41	Tube Type				Material		
42	Shell		ID	OD	In	Shell Cover	(Integ.) (Remov.)
43	Channel or Bonnet					Channel Cover	
44	Tubesheet-Stationary					Tubesheet-Floating	
45	Floating Head Cover					Impingement Protection	
46	Baffles-Cross		Type			%Cut (Diam/Area)	Spacing: c/c Inlet In
47	Baffles-Long					Seal Type	
48	Supports-Tube		U-Bend			Type	
49	Bypass Seal Arrangement					Tube-to-Tubesheet Joint	
50	Expansion Joint					Type	
51	pv^2-Inlet Nozzle		Bundle Entrance			Bundle Exit	
52	Gaskets-Shell Side					Tube Side	
53	Floating Head						
54	Code Requirements					TEMA Class	
55	Weight / Shell		Filled with Water			Bundle	Lb
56	Remarks						
57							
58							
59							
60							
61							

FIGURE G-5.2M
HEAT EXCHANGER SPECIFICATION SHEET

1					Job No.		
2	Customer				Reference No.		
3	Address				Proposal No.		
4	Plant Location				Date	Rev.	
5	Service of Unit				Item No.		
6	Size	Type	(Hor/Vert)		Connected in	Parallel	Series
7	Surf/Unit (Gross/Eff.)		Sq m; Shells/Unit		Surf/Shell (Gross/Eff.)		Sq m
8	PERFORMANCE OF ONE UNIT						
9	Fluid Allocation			Shell Side		Tube Side	
10	Fluid Name						
11	Fluid Quantity Total		kg/Hr				
12	Vapor (In/Out)			|		|	
13	Liquid			|		|	
14	Steam			|		|	
15	Water			|		|	
16	Noncondensable			|		|	
17	Temperature (In/Out)		°C	|		|	
18	Specific Gravity			|		|	
19	Viscosity, Liquid		Cp	|		|	
20	Molecular Weight, Vapor			|		|	
21	Molecular Weight, Noncondensable			|		|	
22	Specific Heat		J/kg °C	|		|	
23	Thermal Conductivity		W/m °C	|		|	
24	Latent Heat		J/kg @ °C				
25	Inlet Pressure		kPa(abs.)				
26	Velocity		m/sec				
27	Pressure Drop, Allow. /Calc.		kPa	/		/	
28	Fouling Resistance (Min.)		Sq m °C / W				
29	Heat Exchanged			W:MTD (Corrected)			°C
30	Transfer Rate, Service			Clean			W/Sq m °C
31	CONSTRUCTION OF ONE SHELL					Sketch (Bundle/Nozzle Orientation)	
32			Shell Side	Tube Side			
33	Design / Test Pressure	kPag	/	/			
34	Design Temp. Max/Min	°C	/	/			
35	No. Passes per Shell						
36	Corrosion Allowance	mm					
37	Connections	In					
38	Size &	Out					
39	Rating	Intermediate					
40	Tube No.	OD	mm;Thk (Min/Avg)	mm;Length	mm;Pitch	mm	◁ 30 △ 60 ▭ 90 ◇ 45
41	Tube Type				Material		
42	Shell	ID	OD	mm	Shell Cover	(Integ.)	(Remov.)
43	Channel or Bonnet				Channel Cover		
44	Tubesheet-Stationary				Tubesheet-Floating		
45	Floating Head Cover				Impingement Protection		
46	Baffles-Cross		Type		%Cut (Diam/Area)	Spacing: c/c	Inlet mm
47	Baffles-Long				Seal Type		
48	Supports-Tube		U-Bend		Type		
49	Bypass Seal Arrangement				Tube-to-Tubesheet Joint		
50	Expansion Joint				Type		
51	pv^2-Inlet Nozzle		Bundle Entrance		Bundle Exit		
52	Gaskets-Shell Side				Tube Side		
53	Floating Head						
54	Code Requirements				TEMA Class		
55	Weight / Shell		Filled with Water		Bundle		kg
56	Remarks						
57							
58							
59							
60							
61							

G-1 SHOP OPERATION

The detailed methods of shop operation are left to the discretion of the manufacturer in conformity with these Standards.

G-2 INSPECTION

G-2.1 MANUFACTURER'S INSPECTION

Inspection and testing of units will be provided by the manufacturer unless otherwise specified. The manufacturer shall carry out the inspections required by the ASME Code, and also inspections required by state and local codes when the purchaser specifies the plant location.

G-2.2 PURCHASER'S INSPECTION

The purchaser shall have the right to make inspections during fabrication and to witness any tests when he has so requested. Advance notification shall be given as agreed between the manufacturer and the purchaser. Inspection by the purchaser shall not relieve the manufacturer of his responsibilities.

G-3 NAME PLATES

G-3.1 MANUFACTURER'S NAME PLATE

A suitable manufacturer's name plate of corrosion resistant material shall be permanently attached to the head end or the shell of each TEMA exchanger. Name plates for exchangers manufactured in accordance with Classes "R" and "B" shall be austenitic (300 series) stainless. When insulation thickness is specified by the purchaser, the name plate shall be attached to a bracket welded to the exchanger.

G-3.11 NAME PLATE DATA

In addition to all data required by the ASME Code, a name plate shall also include the following (if provided):

User's equipment identification
User's order number

G-3.12 SUPPLEMENTAL INFORMATION

The manufacturer shall supply supplemental information where it is pertinent to the operation or testing of the exchanger. This would include information pertaining to differential design and test pressure conditions, restrictions on operating conditions for fixed tubesheet type exchangers, or other restrictive conditions applicable to the design and/or operation of the unit or its components. Such information can be noted on the name plate or on a supplemental plate attached to the exchanger at the name plate location.

G-3.2 PURCHASER'S NAME PLATE

Purchaser's name plates, when used, are to be supplied by the purchaser and supplement rather than replace the manufacturer's name plate.

G-3.3 TEMA REGISTRATION PLATE

The TEMA organization has adopted a voluntary registration system for TEMA members only. When a heat exchanger is registered with TEMA, a unique number is assigned to the heat exchanger. A TEMA registration plate, showing this number, is affixed to the heat exchanger and the ASME Code data report is placed on file at the TEMA office. By referencing this registration number, a copy of the ASME Code data report may be obtained by the purchaser from the TEMA office.

G-4 DRAWINGS AND ASME CODE DATA REPORTS

G-4.1 DRAWINGS FOR APPROVAL AND CHANGE

The manufacturer shall submit for purchaser's approval three (3) prints of an outline drawing showing nozzle sizes and locations, overall dimensions, supports and weight. Other drawings may be furnished as agreed upon by the purchaser and the manufacturer. It is anticipated that a reasonable number of minor drawing changes may be required at that time. Changes subsequent to receipt of approval may cause additional expense chargeable to the purchaser. Purchaser's approval of drawings does not relieve the manufacturer of responsibility for compliance with this Standard and applicable ASME Code requirements. The manufacturer shall not make any changes

on the approved drawings without express agreement of the purchaser. Shop detail drawings, while primarily for internal use by the fabricator, may be furnished to the purchaser upon request. When detail drawings are requested, they will only be supplied after outline drawings have been approved.

G-4.2 DRAWINGS FOR RECORD

After approval of drawings, the manufacturer shall furnish three (3) prints or, at his option, a transparency of all approved drawings.

G-4.3 PROPRIETARY RIGHTS TO DRAWINGS

The drawings and the design indicated by them are to be considered the property of the manufacturer and are not to be used or reproduced without his permission, except by the purchaser for his own internal use.

G-4.4 ASME CODE DATA REPORTS

After completion of fabrication and inspection of ASME Code stamped exchangers, the manufacturer shall furnish three (3) copies of the ASME Manufacturer's Data Report.

G-5 GUARANTEES

G-5.1 GENERAL

The specific terms of the guarantees should be agreed upon by the manufacturer and purchaser. Unless otherwise agreed upon by the manufacturer and purchaser, the following paragraphs in this section will be applicable.

G-5.2 PERFORMANCE

The purchaser shall furnish the manufacturer with all information needed for clear understanding of performance requirements, including any special requirements. The manufacturer shall guarantee thermal performance and mechanical design of a heat exchanger, when operated at the design conditions specified by the purchaser in his order, or shown on the exchanger specification sheet furnished by the manufacturer (Figure G-5.2, G-5.2M). This guarantee shall extend for a period of twelve (12) months after shipping date. The manufacturer shall assume no responsibility for excessive fouling of the apparatus by material such as coke, silt, scale, or any foreign substance that may be deposited. The thermal guarantee shall not be applicable to exchangers where the thermal performance rating was made by the purchaser.

G-5.21 THERMAL PERFORMANCE TEST

A performance test shall be made if it is established after operation that the performance of the exchanger is not satisfactory, provided the thermal performance rating was made by the manufacturer. Test conditions and procedures shall be selected by agreement between the purchaser and the manufacturer to permit extrapolation of the test results to the specified design conditions.

G-5.22 DEFECTIVE PARTS

The manufacturer shall repair or replace F.O.B. his plant any parts proven defective within the guarantee period. Finished materials and accessories purchased from other manufacturers, including tubes, are warranted only to the extent of the original manufacturer's warranty to the heat exchanger fabricator.

G-5.3 CONSEQUENTIAL DAMAGES

The manufacturer shall not be held liable for any indirect or consequential damage.

G-5.4 CORROSION AND VIBRATION

The manufacturer assumes no responsibility for deterioration of any part or parts of the equipment due to corrosion, erosion, flow induced tube vibration, or any other causes, regardless of when such deterioration occurs after leaving the manufacturer's premises, except as provided for in Paragraphs G-5.2 and G-5.22.

G-5.5 REPLACEMENT AND SPARE PARTS

When replacement or spare tube bundles, shells, or other parts are purchased, the manufacturer is to guarantee satisfactory fit of such parts only if he was the original manufacturer. Parts fabricated to drawings furnished by the purchaser shall be guaranteed to meet the dimensions and tolerances specified.

G-6 PREPARATION OF HEAT EXCHANGERS FOR SHIPMENT

G-6.1 CLEANING

Internal and external surfaces are to be free from loose scale and other foreign material that is readily removable by hand or power brushing.

G-6.2 DRAINING

Water, oil, or other liquids used for cleaning or hydrostatic testing are to be drained from all units before shipment. This is not to imply that the units must be completely dry.

G-6.3 FLANGE PROTECTION

All exposed machined contact surfaces shall be coated with a removable rust preventative and protected against mechanical damage by suitable covers.

G-6.4 THREADED CONNECTION PROTECTION

All threaded connections are to be suitably plugged.

G-6.5 DAMAGE PROTECTION

The exchanger and any spare parts are to be suitably protected to prevent damage during shipment.

G-6.6 EXPANSION JOINT PROTECTION

External thin walled expansion bellows shall be equipped with a protective cover which does not restrain movement.

G-7 GENERAL CONSTRUCTION FEATURES OF TEMA STANDARD HEAT EXCHANGERS

G-7.1 SUPPORTS

All heat exchangers are to be provided with supports.

*G-7.11 HORIZONTAL UNITS

The supports should be designed to accommodate the weight of the unit and contents, including the flooded weight during hydrostatic test.

For units with removable tube bundles, supports should be designed to withstand a pulling force equal to 1-1/2 times the weight of the tube bundle.

For purposes of support design, forces from external nozzle loadings, wind and seismic events are assumed to be negligible unless the purchaser specifically details the requirements. When these additional loads and forces are required to be considered, the combinations need not be assumed to occur simultaneously.

The references under Paragraph G-7.13 may be used for calculating resulting stresses due to the saddle supports.

Horizontal units are normally provided with at least two saddle type supports, with holes for anchor bolts. The holes in all but one of the supports are to be elongated to accommodate axial movement of the unit under operating conditions. Other types of support may be used if all design criteria are met, and axial movement is accommodated.

*G-7.12 VERTICAL UNITS

Vertical units are to be provided with supports adequate to meet design requirements. The supports may be of the lug, annular ring, leg or skirt type. If the unit is to be located in a supporting structure, the supports should be of sufficient size to allow clearance for the body flanges.

G-7.13 REFERENCES

(1) Zick, L. P., "Stresses in Large Horizontal Cylindrical Pressure Vessels on Two Saddle Supports," Pressure Vessel and Piping; Design and Analysis, ASME, 1972.

(2) Vinet, R., and Dore, R., "Stresses and Deformations in a Cylindrical Shell Lying on a Continuous Rigid Support," Paper No. 75-AM-1, Journal of Applied Mechanics, Trans. ASME.

(3) Krupka, V., "An Analysis for Lug or Saddle Supported Cylindrical Pressure Vessels," Proceedings of the First International Conference on Pressure Vessel Technology, pp. 491-500.

(4) Singh, K. P., Soler, A. I., "Mechanical Design of Heat Exchangers and Pressure Vessel Components," Chapter 17, Arcturus Publishers, Inc.

(5) Bijlaard, P. P., "Stresses from Local Loadings in Cylindrical Pressure Vessels," Trans. ASME, Vol. 77, No. 6, (August 1955).

(6) Wichman, K. R., Hopper, A. G., and Mershon, J. L., "Local Stresses in Spherical and Cylindrical Shells due to External Loadings," Welding Research Council, Bulletin No. 107, Rev. 1.

(7) Rodabaugh, E. C., Dodge, W. G., and Moore, S. E., "Stress Indices at Lug Supports on Piping Systems," Welding Research Council Bulletin No. 198.

(8) Brownell, L. E., and Young, E. H., "Process Equipment Design," John Wiley & Sons Inc.

(9) Jawad, M. H., and Farr, J. R., "Structural Analysis and Design of Process Equipment," John Wiley and Sons, Inc., 1984.

(10) Bednar, H. H., "Pressure Vessel Design Handbook," Van Nostrand Reinhold Company.

(11) Blodgett, O. W., "Design of Welded Structures," The James F. Lincoln Arc Welding Foundation, 1966.

(12) Moss, Dennis R., "Pressure Vessel Design Manual," 1987, Gulf Publishing Company.

*G-7.2 LIFTING DEVICES

Channels, bonnets, and covers which weigh over 60 lbs. (27.2 Kg) are to be provided with lifting lugs, rings or tapped holes for eyebolts. Unless otherwise specified, these lifting devices are designed to lift only the component to which they are directly attached.

Lugs for lifting the complete unit are not normally provided. When lifting lugs or trunnions are required by the purchaser to lift the complete unit, the device must be adequately designed.

(1) The purchaser shall inform the manufacturer about the way in which the lifting device will be used. The purchaser shall be notified of any limitations of the lifting device relating to design or method of rigging.

(2) Liquid penetrant examination of the lifting device attachment weld should be considered on large heavy units.

(3) The design load shall incorporate an appropriate impact factor.

(4) Plate-type lifting lugs should be oriented to minimize bending stresses.

(5) The hole diameter in the lifting device must be large enough to accept a shackle pin having a load rating greater than the design load.

(6) The effect on the unit component to which the lifting device is attached should be considered. It may be necessary to add a reinforcing plate, annular ring or pad to distribute the load.

(7) The adequacy of the exchanger to accommodate the lifting loads should be evaluated.

*G-7.3 WIND & SEISMIC DESIGN

For wind and seismic forces to be considered in the design of a heat exchanger, the purchaser must specify in the inquiry the design requirements. The "Recommended Good Practice" section of these Standards provides the designer with a discussion on this subject and selected references for design application.

E-1 PERFORMANCE OF HEAT EXCHANGERS

Satisfactory operation of heat exchangers can be obtained only from units which are properly designed and have built-in quality. Correct installation and preventive maintenance are user responsibilities.

E-1.1 PERFORMANCE FAILURES

The failure of heat exchanger equipment to perform satisfactorily may be caused by one or more factors, such as:

(1) Excessive fouling.

(2) Air or gas binding resulting from improper piping installation or lack of suitable vents.

(3) Operating conditions differing from design conditions.

(4) Maldistribution of flow in the unit.

(5) Excessive clearances between the baffles and shell and/or tubes, due to corrosion.

(6) Improper thermal design.

The user's best assurance of satisfactory performance lies in dependence upon manufacturers competent in the design and fabrication of heat transfer equipment.

E-2 INSTALLATION OF HEAT EXCHANGERS

E-2.1 HEAT EXCHANGER SETTINGS

E-2.11 CLEARANCE FOR DISMANTLING

For straight tube exchangers fitted with removable bundles, provide sufficient clearance at the stationary head end to permit removal of the bundle from the shell and provide adequate space beyond the rear head to permit removal of the shell cover and/or floating head cover.

For fixed tubesheet exchangers, provide sufficient clearance at one end to permit withdrawal and replacement of the tubes, and enough space beyond the head at the opposite end to permit removal of the bonnet or channel cover.

For U-tube heat exchangers, provide sufficient clearance at the stationary head end to permit withdrawal of the tube bundle, or at the opposite end to permit removal of the shell.

E-2.12 FOUNDATIONS

Foundations must be adequate so that exchangers will not settle and impose excessive strains on the exchanger. Foundation bolts should be set to allow for setting inaccuracies. In concrete footings, pipe sleeves at least one size larger than bolt diameter slipped over the bolt and cast in place are best for this purpose, as they allow the bolt center to be adjusted after the foundation has set.

E-2.13 FOUNDATION BOLTS

Foundation bolts should be loosened at one end of the unit to allow free expansion of shells. Slotted holes in supports are provided for this purpose.

E-2.14 LEVELING

Exchangers must be set level and square so that pipe connections may be made without forcing.

E-2.2 CLEANLINESS PROVISIONS

E-2.21 CONNECTION PROTECTORS

All exchanger openings should be inspected for foreign material. Protective plugs and covers should not be removed until just prior to installation.

E-2.22 DIRT REMOVAL

The entire system should be clean before starting operation. Under some conditions, the use of strainers in the piping may be required.

E-2.23 CLEANING FACILITIES

Convenient means should be provided for cleaning the unit as suggested under "Maintenance of Heat Exchangers," Paragraph E-4.

E-2.3 FITTINGS AND PIPING

E-2.31 BY-PASS VALVES

It may be desirable for purchaser to provide valves and by-passes in the piping system to permit inspection and repairs.

E-2.32 TEST CONNECTIONS

When not integral with the exchanger nozzles, thermometer well and pressure gage connections should be installed close to the exchanger in the inlet and outlet piping.

E-2.33 VENTS

Vent valves should be provided by purchaser so units can be purged to prevent vapor or gas binding. Special consideration must be given to discharge of hazardous or toxic fluids.

E-2.34 DRAINS

Drains may discharge to atmosphere, if permissible, or into a vessel at lower pressure. They should not be piped to a common closed manifold.

E-2.35 PULSATION AND VIBRATION

In all installations, care should be taken to eliminate or minimize transmission of fluid pulsations and mechanical vibrations to the heat exchangers.

E-2.36 SAFETY RELIEF DEVICES

The ASME Code defines the requirements for safety relief devices. When specified by the purchaser, the manufacturer will provide the necessary connections for the safety relief devices. The size and type of the required connections will be specified by the purchaser. The purchaser will provide and install the required relief devices.

E-3 OPERATION OF HEAT EXCHANGERS

E-3.1 DESIGN AND OPERATING CONDITIONS

Equipment must not be operated at conditions which exceed those specified on the name plate(s).

E-3.2 OPERATING PROCEDURES

Before placing any exchanger in operation, reference should be made to the exchanger drawings, specification sheet(s) and name plate(s) for any special instructions. Local safety and health regulations must be considered. Improper start-up or shut-down sequences, particularly of fixed tubesheet units, may cause leaking of tube-to-tubesheet and/or bolted flanged joints.

E-3.21 START-UP OPERATION

Most exchangers with removable tube bundles may be placed in service by first establishing circulation of the cold medium, followed by the gradual introduction of the hot medium. During start-up all vent valves should be opened and left open until all passages have been purged of air and are completely filled with fluid. For fixed tubesheet exchangers, fluids must be introduced in a manner to minimize differential expansion between the shell and tubes.

E-3.22 SHUT-DOWN OPERATION

For exchangers with removable bundles, the units may be shut down by first gradually stopping the flow of the hot medium and then stopping the flow of the cold medium. If it is necessary to stop the flow of cold medium, the circulation of hot medium through the exchanger should also be stopped. For fixed tubesheet exchangers, the unit must be shut down in a manner to minimize differential expansion between shell and tubes. When shutting down the system, all units should be drained completely when there is the possibility of freezing or corrosion damage. To guard against water hammer, condensate should be

drained from steam heaters and similar apparatus during start-up or shut-down. To reduce water retention after drainage, the tube side of water cooled exchangers should be blown out with air.

E-3.23 TEMPERATURE SHOCKS

Exchangers normally should not be subjected to abrupt temperature fluctuations. Hot fluid must not be suddenly introduced when the unit is cold, nor cold fluid suddenly introduced when the unit is hot.

E-3.24 BOLTED JOINTS

Heat exchangers are pressure tested before leaving the manufacturer's shop in accordance with ASME Code requirements. However, normal relaxing of the gasketed joints may occur in the interval between testing in the manufacturer's shop and installation at the jobsite. Therefore, all external bolted joints may require retightening after installation and, if necessary, after the exchanger has reached operating temperature.

E-3.25 RECOMMENDED BOLT TIGHTENING PROCEDURE

It is important that all bolted joints be tightened uniformly and in a diametrically staggered pattern, as illustrated in Figure E-3.25, except for special high pressure closures when the instructions of the manufacturer should be followed.

FIGURE E-3.25

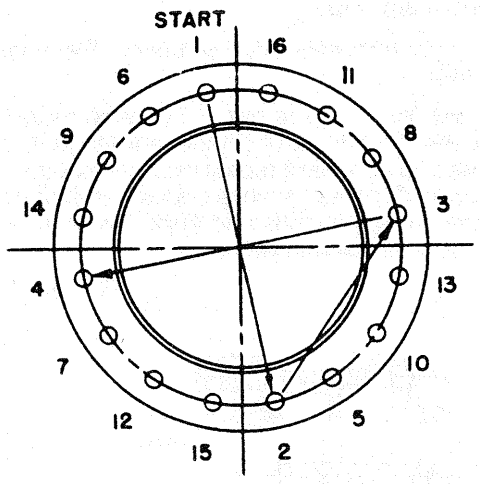

E-4 MAINTENANCE OF HEAT EXCHANGERS

E-4.1 INSPECTION OF UNIT

At regular intervals and as frequently as experience indicates, an examination should be made of the interior and exterior condition of the unit. Neglect in keeping all tubes clean may result in complete stoppage of flow through some tubes which could cause severe thermal strains, leaking tube joints, or structural damage to other components. Sacrificial anodes, when provided, should be inspected to determine whether they should be cleaned or replaced.

E-4.11 INDICATIONS OF FOULING

Exchangers subject to fouling or scaling should be cleaned periodically. A light sludge or scale coating on the tube greatly reduces its efficiency. A marked increase in pressure drop and/or reduction in performance usually indicates cleaning is necessary. The unit should first be checked for air or vapor binding to confirm that this is not the cause for the reduction in performance. Since the difficulty of cleaning increases rapidly as the scale thickness or deposit increases, the intervals between cleanings should not be excessive.

E-4.12 DISASSEMBLY FOR INSPECTION OR CLEANING

Before disassembly, the user must assure himself that the unit has been depressurized, vented and drained, neutralized and/or purged of hazardous material.

To inspect the inside of the tubes and also make them accessible for cleaning, the following procedures should be used:

(1) Stationary Head End

(a) Type A, C, D & N, remove cover only

(b) Type B, remove bonnet

(2) Rear Head End

(a) Type L, N & P, remove cover only

(b) Type M, remove bonnet

(c) Type S & T, remove shell cover and floating head cover

(d) Type W, remove channel cover or bonnet

E-4.13 LOCATING TUBE LEAKS

The following procedures may be used to locate perforated or split tubes and leaking joints between tubes and tubesheets. In most cases, the entire front face of each tubesheet will be accessible for inspection. The point where water escapes indicates a defective tube or tube-to-tubesheet joint.

(1) Units with removable channel cover: Remove channel cover and apply hydraulic pressure in the shell.

(2) Units with bonnet type head: For fixed tubesheet units where tubesheets are an integral part of the shell, remove bonnet and apply hydraulic pressure in the shell. For fixed tubesheet units where tubesheets are not an integral part of the shell and for units with removable bundles, remove bonnet, re-bolt tubesheet to shell or install test flange or gland, whichever is applicable, and apply hydraulic pressure in the shell. See Figure E-4.13-1 for typical test flange and test gland.

FIGURE E-4.13-1

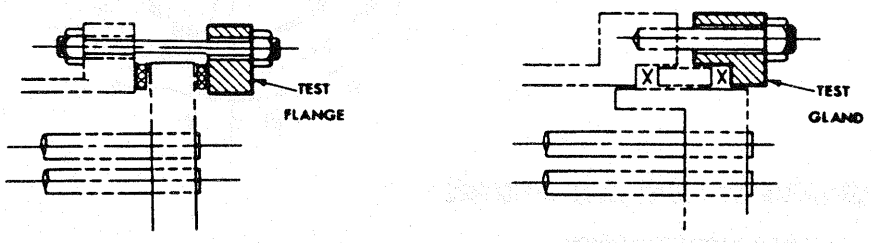

(3) Units with Type S or T floating head: Remove channel cover or bonnet, shell cover and floating head cover. Install test ring and bolt in place with gasket and packing. Apply hydraulic pressure in the shell. A typical test ring is shown in Figure E-4.13-2. When a test ring is not available it is possible to locate leaks in the floating head end by removing the shell cover and applying hydraulic pressure in the tubes. Leaking tube joints may then be located by sighting through the tube lanes. Care must be exercised when testing partially assembled exchangers to prevent over extension of expansion joints or overloading of tubes and/or tube-to-tubesheet joints.

(4) Hydrostatic test should be performed so that the temperature of the metal is over 60° F (16° C) unless the materials of construction have a lower nil-ductility transition temperature.

FIGURE E-4.13-2

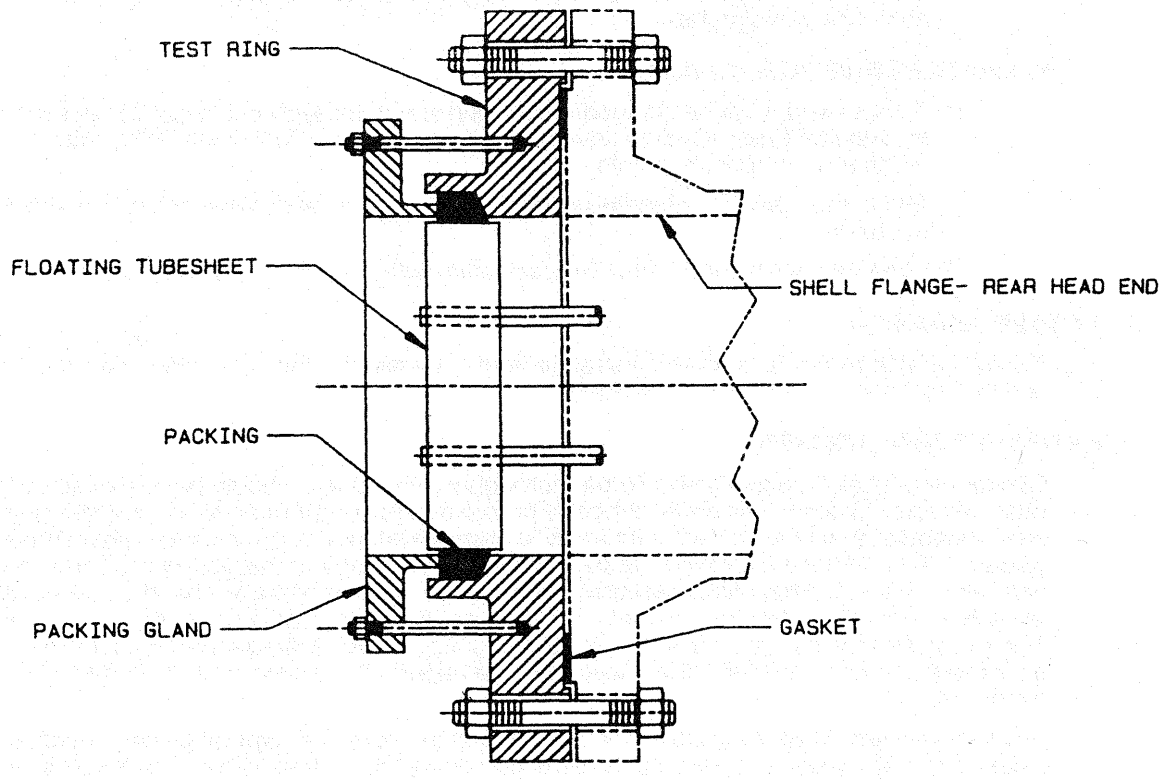

E-4.2 TUBE BUNDLE REMOVAL AND HANDLING

To avoid possible damage during removal of a tube bundle from a shell, a pulling device should be attached to eyebolts screwed into the tubesheet. If the tubesheet does not have tapped holes for eyebolts, steel rods or cables inserted through tubes and attached to bearing plates may be used. The bundle should be supported on the tube baffles, supports or tubesheets to prevent damage to the tubes.

Gasket and packing contact surfaces should be protected.

E-4.3 CLEANING TUBE BUNDLES

E-4.31 CLEANING METHODS

The heat transfer surfaces of heat exchangers should be kept reasonably clean to assure satisfactory performance. Convenient means for cleaning should be made available.

Heat exchangers may be cleaned by either chemical or mechanical methods. The method selected must be the choice of the operator of the plant and will depend on the type of deposit and the facilities available in the plant. Following are several cleaning procedures that may be considered:

(1) Circulating hot wash oil or light distillate through tubes or shell at high velocity may effectively remove sludge or similar soft deposits.

(2) Some salt deposits may be washed out by circulating hot fresh water.

(3) Commercial cleaning compounds are available for removing sludge or scale provided hot wash oil or water is not available or does not give satisfactory results.

(4) High pressure water jet cleaning.

(5) Scrapers, rotating wire brushes, and other mechanical means for removing hard scale, coke, or other deposits.

(6) Employ services of a qualified organization that provides cleaning services. These organizations will check the nature of the deposits to be removed, furnish proper solvents and/or acid solutions containing inhibitors, and provide equipment and personnel for a complete cleaning job.

E-4.32 CLEANING PRECAUTIONS

(1) Tubes should not be cleaned by blowing steam through individual tubes since this heats the tube and may result in severe expansion strain, deformation of the tube, or loosening of the tube-to-tubesheet joint.

(2) When mechanically cleaning a tube bundle, care should be exercised to avoid damaging the tubes.

(3) Cleaning compounds must be compatible with the metallurgy of the exchanger.

E-4.4 TUBE EXPANDING

A suitable tube expander should be used to tighten a leaking tube joint. Care should be taken to ensure that tubes are not over expanded.

E-4.5 GASKET REPLACEMENT

Gaskets and gasket surfaces should be thoroughly cleaned and should be free of scratches and other defects. Gaskets should be properly positioned before attempting to retighten bolts. It is recommended that when a heat exchanger is dismantled for any cause, it be reassembled with new gaskets. This will tend to prevent future leaks and/or damage to the gasket seating surfaces of the heat exchanger. Composition gaskets become dried out and brittle so that they do not always provide an effective seal when reused. Metal or metal jacketed gaskets, when compressed initially, flow to match their contact surfaces. In so doing they are work hardened and, if reused, may provide an imperfect seal or result in deformation and damage to the gasket contact surfaces of the exchanger.

Bolted joints and flanges are designed for use with the particular type of gasket specified. Substitution of a gasket of different construction or improper dimensions may result in leakage and damage to gasket surfaces. Therefore, any gasket substitutions should be of compatible design.

Any leakage at a gasketed joint should be rectified and not permitted to persist as it may result in damage to the gasket surfaces.

Metal jacketed type gaskets are widely used. When these are used with a tongue and groove joint without a nubbin, the gasket should be installed so that the tongue bears on the seamless side of the gasket jacket. When a nubbin is used, the nubbin should bear on the seamless side.

E-4.6 SPARE AND REPLACEMENT PARTS

The procurement of spare or replacement parts from the manufacturer will be facilitated if the correct name for the part, as shown in Section 1, Table N-2, of these Standards is given, together with the serial number, type, size, and other information from the name plate. Replacement parts should be purchased from the original manufacturer.

E-4.7 PLUGGING OF TUBES

In U-tube heat exchangers, and other exchangers of special design, it may not be feasible to remove and replace defective tubes. Defective tubes may be plugged using commercially available tapered plugs with ferrules or tapered only plugs which may or may not be seal welded. Excessive tube plugging may result in reduced thermal performance, higher pressure drop, and/or mechanical damage. It is the user's responsibility to remove plugs and neutralize the bundle prior to sending it to a shop for repairs.

RCB-1 SCOPE AND GENERAL REQUIREMENTS

RCB-1.1 SCOPE OF STANDARDS

RCB-1.11 GENERAL

The TEMA Mechanical Standards are applicable to shell and tube heat exchangers which do not exceed any of the following criteria:

(1) inside diameters of 100 inches (2540 mm)

(2) product of nominal diameter, inches (mm) and design pressure, psi (kPa) of 100,000 (17.5×10^6)

(3) a design pressure of 3,000 psi (20684 kPa)

The intent of these parameters is to limit the maximum shell wall thickness to approximately 3 inches (76 mm), and the maximum stud diameter to approximately 4 inches (102 mm). Criteria contained in these Standards may be applied to units which exceed the above parameters.

R-1.12 DEFINITION OF TEMA CLASS "R" EXCHANGERS

The TEMA Mechanical Standards for Class "R" heat exchangers specify design and fabrication of unfired shell and tube heat exchangers for the generally severe requirements of petroleum and related processing applications.

C-1.12 DEFINITION OF TEMA CLASS "C" EXCHANGERS

The TEMA Mechanical Standards for Class "C" heat exchangers specify design and fabrication of unfired shell and tube heat exchangers for the generally moderate requirements of commercial and general process applications.

B-1.12 DEFINITION OF TEMA CLASS "B" EXCHANGERS

The TEMA Mechanical Standards for Class "B" heat exchangers specify design and fabrication of unfired shell and tube heat exchangers for chemical process service.

RCB-1.13 CONSTRUCTION CODES

The individual vessels shall comply with the ASME (American Society of Mechanical Engineers) Boiler and Pressure Vessel Code, Section VIII, Division 1, hereinafter referred to as the Code. These Standards supplement and define the Code for heat exchanger applications. The manufacturer shall comply with the construction requirements of state and local codes when the purchaser specifies the plant location. It shall be the responsibility of the purchaser to inform the manufacturer of any applicable local codes. Application of the Code symbol is required, unless otherwise specified by the purchaser.

RCB-1.14 MATERIALS-DEFINITION OF TERMS

For purposes of these Standards, "carbon steel" shall be construed as any steel or low alloy falling within the scope of Part UCS of the Code. Metals not included by the foregoing (except cast iron) shall be considered as "alloys" unless otherwise specifically named. Materials of construction, including gaskets, should be specified by the purchaser. The manufacturer assumes no responsibility for deterioration of parts for any reason.

RCB-1.2 DESIGN PRESSURE

RCB-1.21 DESIGN PRESSURE

Design pressures for the shell and tube sides shall be specified separately by the purchaser.

RCB-1.3 TESTING

RCB-1.31 STANDARD TEST

The exchanger shall be hydrostatically tested with water. The test pressure shall be held for at least 30 minutes. The shell side and the tube side are to be tested separately in such a manner that leaks at the tube joints can be detected from at least one side. When the tube side design pressure is the higher pressure, the tube bundle shall be tested outside of the shell only if specified by the purchaser and the construction permits. Welded joints are to be

sufficiently cleaned prior to testing the exchanger to permit proper inspection during the test. The minimum hydrostatic test pressure at room temperature shall be in accordance with the Code.

RCB-1.311 OTHER LIQUID TESTS

Liquids other than water may be used as a testing medium if agreed upon between the purchaser and the manufacturer.

RCB-1.32 PNEUMATIC TEST

When liquid cannot be tolerated as a test medium the exchanger may be given a pneumatic test in accordance with the Code. It must be recognized that air or gas is hazardous when used as a pressure testing medium. The pneumatic test pressure at room temperature shall be in accordance with the Code.

RCB-1.33 SUPPLEMENTARY AIR TEST

When a supplementary air or gas test is specified by the purchaser, it shall be preceded by the hydrostatic test required by Paragraph RCB-1.31. The test pressure shall be as agreed upon by the purchaser and manufacturer, but shall not exceed that required by Paragraph RCB-1.32.

RCB-1.4 METAL TEMPERATURES

RCB-1.41 METAL TEMPERATURE LIMITATIONS FOR PRESSURE PARTS

The metal temperature limitations for various metals are those prescribed by the Code.

RCB-1.42 DESIGN TEMPERATURE OF HEAT EXCHANGER PARTS

RCB-1.421 FOR PARTS NOT IN CONTACT WITH BOTH FLUIDS

Design temperatures for the shell and tube sides shall be specified separately by the purchaser. The Code provides the allowable stress limits for parts to be designed at the specified design temperature.

RCB-1.422 FOR PARTS IN CONTACT WITH BOTH FLUIDS

The design temperature is the design metal temperature and is used to establish the Code stress limits for design. The design metal temperature shall be based on the operating temperatures of the shellside and the tubeside fluids, except when the purchaser specifies some other design metal temperature. When the design metal temperature is less than the higher of the design temperatures referred to in Paragraph RCB-1.421, the design metal temperature and the affected parts shall be shown on the manufacturer's nameplate(s) as described in Paragraph G-3.1.

RCB-1.43 MEAN METAL TEMPERATURES

RCB-1.431 FOR PARTS NOT IN CONTACT WITH BOTH FLUIDS

The mean metal temperature is the calculated metal temperature, under specified operating conditions, of a part in contact with a fluid. It is used to establish metal properties under operating conditions. The mean metal temperature is based on the specified operating temperatures of the fluid in contact with the part.

RCB-1.432 FOR PARTS IN CONTACT WITH BOTH FLUIDS

The mean metal temperature is the calculated metal temperature, under specified operating conditions, of a part in contact with both shellside and tubeside fluids. It is used to establish metal properties under operating conditions. The mean metal temperature is based on the specified operating temperatures of the shellside and tubeside fluids. In establishing the mean metal temperatures, due consideration shall be given to such factors as the relative heat transfer coefficients of the two fluids contacting the part and the relative heat transfer area of the parts contacted by the two fluids.

RCB-1.5 STANDARD CORROSION ALLOWANCES

The standard corrosion allowances used for the various heat exchanger parts are as follows, unless the conditions of service make a different allowance more suitable and such allowance is specified by the purchaser.

RCB-1.51 CARBON STEEL PARTS

R-1.511 PRESSURE PARTS

All carbon steel pressure parts, except as noted below, are to have a corrosion allowance of 1/8" (3.2 mm).

CB-1.511 PRESSURE PARTS

All carbon steel pressure parts, except as noted below, are to have a corrosion allowance of 1/16" (1.6 mm).

RCB-1.512 INTERNAL FLOATING HEAD COVERS

Internal floating head covers are to have the corrosion allowance on all wetted surfaces except gasket seating surfaces. Corrosion allowance on the outside of the flanged portion may be included in the recommended minimum edge distance.

RCB-1.513 TUBESHEETS

Tubesheets are to have the corrosion allowance on each side with the provision that, on the grooved side of a grooved tubesheet, the depth of the gasketed groove may be considered as available for corrosion allowance.

RCB-1.514 EXTERNAL COVERS

Where flat external covers are grooved, the depth of the gasketed groove may be considered as available for corrosion allowance.

RCB-1.515 END FLANGES

Corrosion allowance shall be applied only to the inside diameter of flanges where exposed to the fluids.

RCB-1.516 NONPRESSURE PARTS

Nonpressure parts such as tie-rods, spacers, baffles and support plates are not required to have corrosion allowance.

RCB-1.517 TUBES, BOLTING AND FLOATING HEAD BACKING DEVICES

Tubes, bolting and floating head backing devices are not required to have corrosion allowance.

RCB-1.518 PASS PARTITION PLATES

Pass partition plates are not required to have corrosion allowance.

RCB-1.52 ALLOY PARTS

Alloy parts are not required to have corrosion allowance.

R-1.53 CAST IRON PARTS

Cast iron pressure parts shall have a corrosion allowance of 1/8" (3.2 mm).

CB-1.53 CAST IRON PARTS

Cast iron pressure parts shall have a corrosion allowance of 1/16" (1.6 mm).

RCB-1.6 SERVICE LIMITATIONS

RB-1.61 CAST IRON PARTS

Cast iron shall be used only for water service at pressures not exceeding 150 psi (1034 kPa).

C-1.61 CAST IRON PARTS

Cast iron shall not be used for pressures exceeding 150 psi (1034 kPa), or for lethal or flammable fluids at any pressure.

RCB-1.62 EXTERNAL PACKED JOINTS

Packed joints shall not be used when the purchaser specifies that the fluid in contact with the joint is lethal or flammable.

RCB-1.7 ANODES

Selection and placement of anodes is not the responsibility of the heat exchanger manufacturer. If a heat exchanger is to be furnished with anodes, when requesting a quotation, the purchaser is responsible for furnishing the heat exchanger manufacturer the following information:

(1) Method of anode attachment.

(2) Quantity of anodes required.

(3) Size and manufacturer of the anodes.

(4) Anode material.

(5) Sketch of anode locations and spacing.

If the heat exchanger manufacturer chooses to install anodes for a customer, the manufacturer is not responsible for the suitability of the anodes for the service it is installed in, the life of the anodes, the corrosion protection provided by the anode, or any subsequent damage to the heat exchanger attributed to the anode, the method of anode installation, or the installed location of the anode in the heat exchanger.

*RCB-2 TUBES

RCB-2.1 TUBE LENGTH

The following tube lengths for both straight and U-tube exchangers are commonly used: 96 (2438), 120 (3048), 144 (3658), 192 (4877) and 240 (6096) inches (mm). Other lengths may be used. Also see Paragraph N-1.12.

RCB-2.2 TUBE DIAMETERS AND GAGES

RCB-2.21 BARE TUBES

Table RCB-2.21 lists common tube diameters and gages for bare tubes of copper, steel and alloy. Other diameters and gages are acceptable.

TABLE RCB-2.21

BARE TUBE DIAMETERS AND GAGES			
O.D. Inches (mm)	Copper and Copper Alloys	Carbon Steel, Aluminum and Aluminum Alloys	Other Alloys
	B.W.G.	B.W.G.	B.W.G.
1/4 (6.4)	27 24 22	- - -	27 24 22
3/8 (9.5)	22 20 18	- - -	22 20 18
1/2 (12.7)	20 18	- -	20 18
5/8 (15.9)	20 18 16	18 16 14	20 18 16
3/4 (19.1)	20 18 16	16 14 12	18 16 14
7/8 (22.2)	18 16 14 12	14 12 10 -	16 14 12 -
1 (25.4)	18 16 14	14 12 -	16 14 12
1-1/4 (31.8)	16 14	14 12	14 12
1-1/2 (38.1)	16 14	14 12	14 12
2 (50.8)	14 12	14 12	14 12

Notes:

1. Wall thickness shall be specified as either minimum or average.
2. Characteristics of tubing are shown in Tables D-7 and D7M.

RCB-2.22 INTEGRALLY FINNED TUBES

The nominal fin diameter shall not exceed the outside diameter of the unfinned section. Specified wall shall be based on the thickness at the root diameter.

RCB-2.3 U-TUBES

RCB-2.31 U-BEND REQUIREMENTS

When U-bends are formed, it is normal for the tube wall at the outer radius to thin. The minimum tube wall thickness in the bent portion before bending shall be:

$$t_0 = t_1\left[1 + \frac{d_o}{4R}\right]$$

where

t_0 = Original tube wall thickness, inches (mm)

t_1 = Minimum tube wall thickness calculated by Code rules for a straight tube subjected to the same pressure and metal temperature, inches (mm)

d_0 = Outside tube diameter, inches (mm)

R = Mean radius of bend, inches (mm)

More than one tube gage, or dual gage tubes, may be used in a tube bundle.

When U-bends are formed from tube materials which are relatively non-work-hardening and of suitable temper, tube wall thinning in the bends should not exceed a nominal 17% of original tube wall thickness.

Flattening at the bend shall not exceed 10% of the nominal tube outside diameter.

U-bends formed from tube materials having low ductility, or materials which are susceptible to work-hardening, may require special consideration. Also refer to Paragraph RCB-2.33.

RCB-2.32 BEND SPACING

RCB-2.321 CENTER-TO-CENTER DIMENSION

The center-to-center dimensions between parallel legs of U-tubes shall be such that they can be inserted into the baffle assembly without damage to the tubes.

RCB-2.322 BEND INTERFERENCE

The assembly of bends shall be of workmanlike appearance. Metal-to-metal contact between bends in the same plane shall not be permitted.

RCB-2.33 HEAT TREATMENT

Cold work in forming U-bends may induce embrittlement or susceptibility to stress corrosion in certain materials and/or environments. Heat treatment to alleviate such conditions may be performed by agreement between manufacturer and purchaser.

RCB-2.4 TUBE PATTERN

Standard tube patterns are shown in Figure RCB-2.4.

FIGURE RCB-2.4

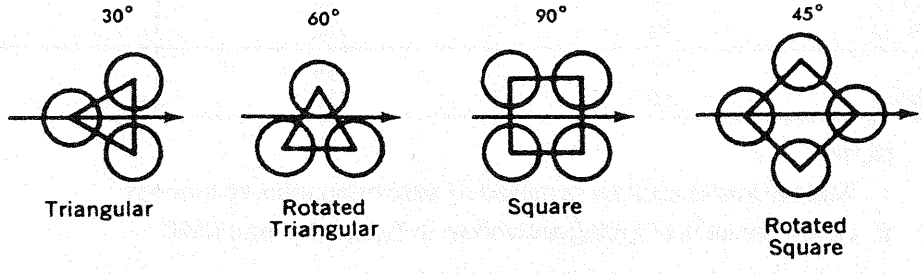

Note: Flow arrows are perpendicular to the baffle cut edge.

RCB-2.41 SQUARE PATTERN

In removable bundle units, when mechanical cleaning of the tubes is specified by the purchaser, tube lanes should be continuous.

RCB-2.42 TRIANGULAR PATTERN

Triangular or rotated triangular pattern should not be used when the shell side is to be cleaned mechanically.

R-2.5 TUBE PITCH

Tubes shall be spaced with a minimum center-to-center distance of 1.25 times the outside diameter of the tube. When mechanical cleaning of the tubes is specified by the purchaser, minimum cleaning lanes of 1/4" (6.4 mm) shall be provided.

C-2.5 TUBE PITCH

Tubes shall be spaced with a minimum center-to-center distance of 1.25 times the outside diameter of the tube. Where the tube diameters are 5/8" (15.9 mm) or less and tube-to-tubesheet joints are expanded only, the minimum center-to-center distance may be reduced to 1.20 times the outside diameter.

B-2.5 TUBE PITCH

Tubes shall be spaced with a minimum center-to-center distance of 1.25 times the outside diameter of the tube. When mechanical cleaning of the tubes is specified by the purchaser and the nominal shell diameter is 12 inches (305 mm) or less, minimum cleaning lanes of 3/16" (4.8 mm) shall be provided. For shell diameters greater than 12 inches (305 mm), minimum cleaning lanes of 1/4" (6.4 mm) shall be provided.

RCB-3 SHELLS AND SHELL COVERS

RCB-3.1 SHELLS

RCB-3.11 SHELL DIAMETERS

It shall be left to the discretion of each manufacturer to establish a system of standard shell diameters within the TEMA Mechanical Standards in order to achieve the economies peculiar to his individual design and manufacturing facilities.

RCB-3.12 TOLERANCES

RCB-3.121 PIPE SHELLS

The inside diameter of pipe shells shall be in accordance with applicable ASTM/ASME pipe specifications.

RCB-3.122 PLATE SHELLS

The inside diameter of any plate shell shall not exceed the design inside diameter by more than 1/8" (3.2 mm) as determined by circumferential measurement.

RCB-3.13 MINIMUM SHELL THICKNESS

Shell thickness is determined by the Code design formulas, plus corrosion allowance, but in no case shall the nominal thickness of shells be less than that shown in the applicable table. The nominal total thickness for clad shells shall be the same as for carbon steel shells.

TABLE R-3.13
MINIMUM SHELL THICKNESS
Dimensions In Inches (mm)

Nominal Shell Diameter		Minimum Thickness				
		Carbon Steel			Alloy *	
		Pipe	Plate			
6	(152)	SCH. 40	-		1/8	(3.2)
8 - 12	(203-305)	SCH. 30	-		1/8	(3.2)
13 - 29	(330-737)	SCH. STD	3/8	(9.5)	3/16	(4.8)
30 - 39	(762-991)	-	7/16	(11.1)	1/4	(6.4)
40 - 60	(1016-1524)	-	1/2	(12.7)	5/16	(7.9)
61 - 80	(1549-2032)	-	1/2	(12.7)	5/16	(7.9)
81 - 100	(2057-2540)	-	1/2	(12.7)	3/8	(9.5)

TABLE CB-3.13
MINIMUM SHELL THICKNESS
Dimensions In Inches (mm)

Nominal Shell Diameter		Minimum Thickness				
		Carbon Steel			Alloy *	
		Pipe	Plate			
6	(152)	SCH. 40	-		1/8	(3.2)
8 - 12	(203-305)	SCH. 30	-		1/8	(3.2)
13 - 23	(330-584)	SCH. 20	5/16	(7.9)	1/8	(3.2)
24 - 29	(610-737)	-	5/16	(7.9)	3/16	(4.8)
30 - 39	(762-991)	-	3/8	(9.5)	1/4	(6.4)
40 - 60	(1016-1524)	-	7/16	(11.1)	1/4	(6.4)
61 - 80	(1549-2032)	-	1/2	(12.7)	5/16	(7.9)
81 - 100	(2057-2540)	-	1/2	(12.7)	3/8	(9.5)

*Schedule 5S is permissible for 6 inch (152 mm) and 8 inch (203 mm) shell diameters.

RCB-3.2 SHELL COVER THICKNESS

Nominal thickness of shell cover heads, before forming, shall be at least equal to the thickness of the shell as shown in the applicable table.

RCB-4 BAFFLES AND SUPPORT PLATES

RCB-4.1 TYPE OF TRANSVERSE BAFFLES

The segmental or multi-segmental type of baffle or tube support plate is standard. Other type baffles are permissible. Baffle cut is defined as the segment opening height expressed as a percentage of the shell inside diameter or as a percentage of the total net free area inside the shell (shell cross sectional area minus total tube area). The number of tube rows that overlap for multi-segmental baffles should be adjusted to give approximately the same net free area flow through each baffle. Baffles shall be cut near the centerline of a row of tubes, of a pass lane, of a tube lane, or outside the tube pattern. Baffles shall have a workmanlike finish on the outside diameter. Typical baffle cuts are illustrated in Figure RCB-4.1. Baffle cuts may be vertical, horizontal or rotated.

FIGURE RCB-4.1

BAFFLE CUTS FOR SEGMENTAL BAFFLES

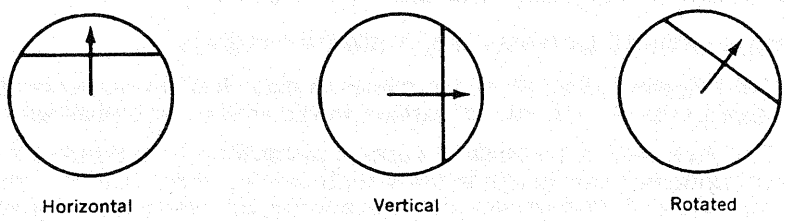

BAFFLE CUTS FOR MULTI-SEGMENTAL BAFFLES

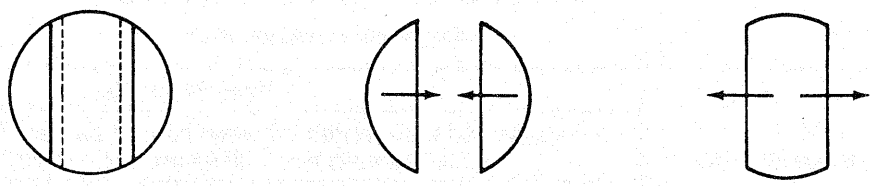

DOUBLE SEGMENTAL

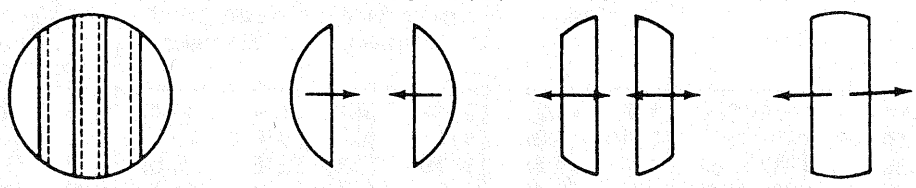

TRIPLE SEGMENTAL

RCB-4.2 TUBE HOLES

Where the maximum unsupported tube length is 36 inches (914 mm) or less, or for tubes larger in diameter than 1-1/4 inches (31.8 mm) OD, standard tube holes are to be 1/32 inch (0.8 mm) over the OD of the tubes. Where the unsupported tube length exceeds 36 inches (914 mm) for tubes 1-1/4 inches (31.8 mm) diameter and smaller, standard tube holes are to be 1/64 inch (0.4 mm) over the OD of the tubes. For pulsating conditions, tube holes may be smaller than standard. Any burrs shall be removed and the tube holes given a workmanlike finish. Baffle holes will have an over-tolerance of 0.010 inch (0.3 mm) except that 4% of the holes are allowed an over-tolerance of 0.015 inch (0.4 mm).

RCB-4.3 TRANSVERSE BAFFLE AND SUPPORT CLEARANCE

The transverse baffle and support plate clearance shall be such that the difference between the shell design inside diameter and the outside diameter of the baffle shall not exceed that indicated in Table RCB-4.3. However, where such clearance has no significant effect on shell side heat transfer coefficient or mean temperature difference, these maximum clearances may be increased to twice the tabulated values. (See Paragraph RCB-4.43.)

TABLE RCB-4.3

Standard Cross Baffle and Support Plate Clearances

Dimensions In Inches (mm)

Nominal Shell ID		Design ID of Shell Minus Baffle OD	
6 - 17	(152-432)	1/8	(3.2)
18 - 39	(457-991)	3/16	(4.8)
40 - 54	(1016-1372)	1/4	(6.4)
55 - 69	(1397-1753)	5/16	(7.9)
70 - 84	(1778-2134)	3/8	(9.5)
85 - 100	(2159-2540)	7/16	(11.1)

The design inside diameter of a pipe shell is defined as the nominal outside diameter of the pipe, minus twice the nominal wall thickness. The design inside diameter of a plate shell is the specified inside diameter. In any case, the design inside diameter may be taken as the actual measured shell inside diameter.

RCB-4.4 THICKNESS OF BAFFLES AND SUPPORT PLATES

RCB-4.41 TRANSVERSE BAFFLES AND SUPPORT PLATES

The following tables show the minimum thickness of transverse baffles and support plates applying to all materials for various shell diameters and plate spacings.

The thickness of the baffle or support plates for U-tube bundles shall be based on the unsupported tube length in the straight section of the bundle. The U-bend length shall not be considered in determining the unsupported tube length for required plate thickness.

TABLE R-4.41

BAFFLE OR SUPPORT PLATE THICKNESS

Dimensions in Inches (mm)

Nominal Shell ID		Plate Thickness									
		Unsupported tube length between central baffles. End spaces between tubesheets and baffles are not a consideration.									
		24 (610) and Under		Over 24 (610) to 36 (914) Inclusive		Over 36 (914) to 48 (1219) Inclusive		Over 48 (1219) to 60 (1524) Inclusive		Over 60 (1524)	
6 - 14	(152-356)	1/8	(3.2)	3/16	(4.8)	1/4	(6.4)	3/8	(9.5)	3/8	(9.5)
15 - 28	(381-711)	3/16	(4.8)	1/4	(6.4)	3/8	(9.5)	3/8	(9.5)	1/2	(12.7)
29 - 38	(737-965)	1/4	(6.4)	5/16	(7.5)	3/8	(9.5)	1/2	(12.7)	5/8	(15.9)
39 - 60	(991-1524)	1/4	(6.4)	3/8	(9.5)	1/2	(12.7)	5/8	(15.9)	5/8	(15.9)
61 - 100	(1549-2540)	3/8	(9.5)	1/2	(12.7)	5/8	(15.9)	3/4	(19.1)	3/4	(19.1)

TABLE CB-4.41

BAFFLE OR SUPPORT PLATE THICKNESS

Dimensions in Inches (mm)

Nominal Shell ID		Plate Thickness									
		Unsupported tube length between central baffles. End spaces between tubesheets and baffles are not a consideration.									
		12 (305) and Under		Over 12 (305) to 24 (610) Inclusive		Over 24 (610) to 36 (914) Inclusive		Over 36 (914) to 48 (1219) Inclusive		Over 48 (1219) to 60 (1524) Inclusive		Over 60 (1524)	
6 - 14	(152-356)	1/16	(1.6)	1/8	(3.2)	3/16	(4.8)	1/4	(6.4)	3/8	(9.5)	3/8	(9.5)
15 - 28	(381-711)	1/8	(3.2)	3/16	(4.8)	1/4	(6.4)	3/8	(9.5)	3/8	(9.5)	1/2	(12.7)
29 - 38	(737-965)	3/16	(4.8)	1/4	(6.4)	5/16	(7.5)	3/8	(9.5)	1/2	(12.7)	5/8	(15.9)
39 - 60	(991-1524)	1/4	(6.4)	1/4	(6.4)	3/8	(9.5)	1/2	(12.7)	5/8	(15.9)	5/8	(15.9)
61 - 100	(1549-2540)	1/4	(6.4)	3/8	(9.5)	1/2	(12.7)	5/8	(15.9)	3/4	(19.1)	3/4	(19.1)

R-4.42 LONGITUDINAL BAFFLES

Longitudinal baffles shall not be less than 1/4" (6.4 mm) nominal metal thickness.

CB-4.42 LONGITUDINAL BAFFLES

Longitudinal carbon steel baffles shall not be less than 1/4" (6.4 mm) nominal metal thickness.

Longitudinal alloy baffles shall not be less than 1/8" (3.2 mm) nominal metal thickness.

RCB-4.43 SPECIAL PRECAUTIONS

Special consideration should be given to:

(1) Baffles and support plates subjected to pulsations.

(2) Baffles and support plates engaging finned tubes.

(3) Longitudinal baffles subjected to large differential pressures due to high shell side fluid pressure drop.

(4) Support of tube bundles when larger clearances allowed by RCB-4.3 are used.

RCB-4.5 SPACING OF BAFFLES AND SUPPORT PLATES

RCB-4.51 MINIMUM SPACING

Segmental baffles normally should not be spaced closer than 1/5 of the shell ID or 2 inches (51 mm), whichever is greater. However, special design considerations may dictate a closer spacing.

RCB-4.52 MAXIMUM SPACING

Tube support plates shall be so spaced that the unsupported tube span does not exceed the value indicated in Table RCB-4.52 for the tube material used.

TABLE RCB-4.52

MAXIMUM UNSUPPORTED STRAIGHT TUBE SPANS

Dimensions in Inches (mm)

Tube OD	Tube Materials and Temperature Limits °F (°C)	
	Carbon Steel & High Alloy Steel, 750 (399) Low Alloy Steel, 850 (454) Nickel-Copper, 600 (316) Nickel, 850 (454) Nickel-Chromium-Iron, 1000 (538)	Aluminum & Aluminum Alloys, Copper & Copper Alloys, Titanium Alloys At Code Maximum Allowable Temperature
1/4 (6.4)	26 (660)	22 (559)
3/8 (9.5)	35 (889)	30 (762)
1/2 (12.7)	44 (1118)	38 (965)
5/8 (15.9)	52 (1321)	45 (1143)
3/4 (19.1)	60 (1524)	52 (1321)
7/8 (22.2)	69 (1753)	60 (1524)
1 (25.4)	74 (1880)	64 (1626)
1-1/4 (31.8)	88 (2235)	76 (1930)
1-1/2 (38.1)	100 (2540)	87 (2210)
2 (50.8)	125 (3175)	110 (2794)

Notes:

(1) Above the metal temperature limits shown, maximum spans shall be reduced in direct proportion to the fourth root of the ratio of elastic modulus at temperature to elastic modulus at tabulated limit temperature.

(2) In the case of circumferentially finned tubes, the tube OD shall be the diameter at the root of the fins and the corresponding tabulated or interpolated span shall be reduced in direct proportion to the fourth root of the ratio of the weight per unit length of the tube, if stripped of fins to that of the actual finned tube.

(3) The maximum unsupported tube spans in Table RCB-4.52 do not consider potential flow induced vibration problems. Refer to Section 6 for vibration criteria.

RCB-4.53 BAFFLE SPACING

Baffles normally shall be spaced uniformly, spanning the effective tube length. When this is not possible, the baffles nearest the ends of the shell, and/or tubesheets, shall be located as close as practical to the shell nozzles. The remaining baffles normally shall be spaced uniformly.

RCB-4.54 U-TUBE REAR SUPPORT

The support plates or baffles adjacent to the bends in U-tube exchangers shall be so located that, for any individual bend, the sum of the bend diameter plus the straight lengths measured along both legs from supports to bend tangents does not exceed the maximum unsupported span determined from Paragraph RCB-4.52. Where bend diameters prevent compliance, special provisions in addition to the above shall be made for support of the bends.

RCB-4.55 SPECIAL CASES

When pulsating conditions are specified by the purchaser, unsupported spans shall be as short as pressure drop restrictions permit. If the span under these circumstances approaches the maximum permitted by Paragraph RCB-4.52, consideration should be given to alternative flow arrangements which would permit shorter spans under the same pressure drop restrictions.

RCB-4.56 TUBE BUNDLE VIBRATION

Shell side flow may produce excitation forces which result in destructive tube vibrations. Existing predictive correlations are inadequate to insure that any given design will be free of such damage. The vulnerability of an exchanger to flow induced vibration depends on the flow rate, tube and baffle materials, unsupported tube spans, tube field layout, shell diameter, and inlet/outlet configuration. Section 6 of these Standards contains information which is

intended to alert the designer to potential vibration problems. In any case, and consistent with Paragraph G-5, the manufacturer is not responsible or liable for any direct, indirect, or consequential damages resulting from vibration.

RCB-4.6 IMPINGEMENT BAFFLES AND EROSION PROTECTION

The following paragraphs provide limitations to prevent or minimize erosion of tube bundle components at the entrance and exit areas. These limitations have no correlation to tube vibration and the designer should refer to Section 6 for information regarding this phenomenon.

RCB-4.61 SHELL SIDE IMPINGEMENT PROTECTION REQUIREMENTS

An impingement plate, or other means to protect the tube bundle against impinging fluids, shall be provided when entrance line values of ρV^2 exceed the following: non-abrasive, single phase fluids, 1500 (2232); all other liquids, including a liquid at its boiling point, 500 (744). For all other gases and vapors, including all nominally saturated vapors, and for liquid vapor mixtures, impingement protection is required. V is the linear velocity of the fluid in feet per second (meters per second) and ρ is its density in pounds per cubic foot (kilograms per cubic meter). A properly designed diffuser may be used to reduce line velocities at shell entrance.

*RCB-4.62 SHELL OR BUNDLE ENTRANCE AND EXIT AREAS

In no case shall the shell or bundle entrance or exit area produce a value of ρV^2 in excess of 4,000 (5953) where V is the linear velocity of the fluid in feet per second (meters per second) and ρ is its density in pounds per cubic foot (kilograms per cubic meter).

*RCB-4.621 SHELL ENTRANCE OR EXIT AREA WITH IMPINGEMENT PLATE

When an impingement plate is provided, the flow area shall be considered the unrestricted area between the inside diameter of the shell at the nozzle and the face of the impingement plate.

*RCB-4.622 SHELL ENTRANCE OR EXIT AREA WITHOUT IMPINGEMENT PLATE

For determining the area available for flow at the entrance or exit of the shell where there is no impingement plate, the flow area between the tubes within the projection of the nozzle bore and the actual unrestricted radial flow area from under the nozzle or dome measured between the tube bundle and shell inside diameter may be considered.

*RCB-4.623 BUNDLE ENTRANCE OR EXIT AREA WITH IMPINGEMENT PLATE

When an impingement plate is provided under a nozzle, the flow area shall be the unrestricted area between the tubes within the compartments between baffles and/or tubesheet.

*RCB-4.624 BUNDLE ENTRANCE OR EXIT AREA WITHOUT IMPINGEMENT PLATE

For determining the area available for flow at the entrance or exit of the tube bundle where there is no impingement plate, the flow area between the tubes within the compartments between baffles and/or tubesheet may be considered.

RCB-4.63 TUBE SIDE

Consideration shall be given to the need for special devices to prevent erosion of the tube ends under the following conditions:

(1) Use of an axial inlet nozzle.

(2) Liquid ρV^2 is in excess of 6000 (8928), where V is the linear velocity in feet per second (meter per second), and ρ is its density in pounds per cubic foot (kilograms per cubic meter).

RCB-4.7 TIE RODS AND SPACERS

Tie rods and spacers, or other equivalent means of tying the baffle system together, shall be provided to retain all transverse baffles and tube support plates securely in position.

R-4.71 NUMBER AND SIZE OF TIE RODS

Table R-4.71 shows suggested tie rod count and diameter for various sizes of heat exchangers. Other combinations of tie rod number and diameter with equivalent metal area are permissible; however, no fewer than four tie rods, and no diameter less than 3/8" (9.5 mm) shall be used. Any baffle segment requires a minimum of three points of support.

TABLE R-4.71
TIE ROD STANDARDS
Dimensions in Inches (mm)

Nominal Shell Diameter		Tie Rod Diameter	Minimum Number of Tie Rods
6 - 15	(152-381)	3/8 (9.5)	4
16 - 27	(406-686)	3/8 (9.5)	6
28 - 33	(711-838)	1/2 (12.7)	6
34 - 48	(864-1219)	1/2 (12.7)	8
49 - 60	(1245-1524)	1/2 (12.7)	10
61-100	(1549-2540)	5/8 (15.9)	12

CB-4.71 NUMBER AND SIZE OF TIE RODS

Table CB-4.71 shows suggested tie rod count and diameter for various sizes of heat exchangers. Other combinations of tie rod number and diameter with equivalent metal area are permissible; however, no fewer than four tie rods, and no diameter less than 3/8" (9.5 mm) shall be used above 15 inch (381) nominal shell diameter. Any baffle segment requires a minimum of three points of support.

TABLE CB-4.71
TIE ROD STANDARDS
Dimensions in Inches (mm)

Nominal Shell Diameter		Tie Rod Diameter	Minimum Number of Tie Rods
6 - 15	(152-381)	1/4 (6.4)	4
16 - 27	(406-686)	3/8 (9.5)	6
28 - 33	(711-838)	1/2 (12.7)	6
34 - 48	(864-1219)	1/2 (12.7)	8
49 - 60	(1245-1524)	1/2 (12.7)	10
61-100	(1549-2540)	5/8 (15.9)	12

RCB-4.8 SEALING DEVICES

In addition to the baffles, sealing devices should be installed when necessary to prevent excessive fluid by-passing around or through the tube bundle. Sealing devices may be seal strips, tie rods with spacers, dummy tubes, or combinations of these.

RCB-4.9 KETTLE TYPE REBOILERS

For kettle type reboilers, skid bars and a bundle hold-down may be provided. One method is shown in Figure RCB-4.9. Other methods which satisfy the intent are acceptable. Bundle hold-downs are not required for fixed tubesheet kettles.

FIGURE RCB-4.9

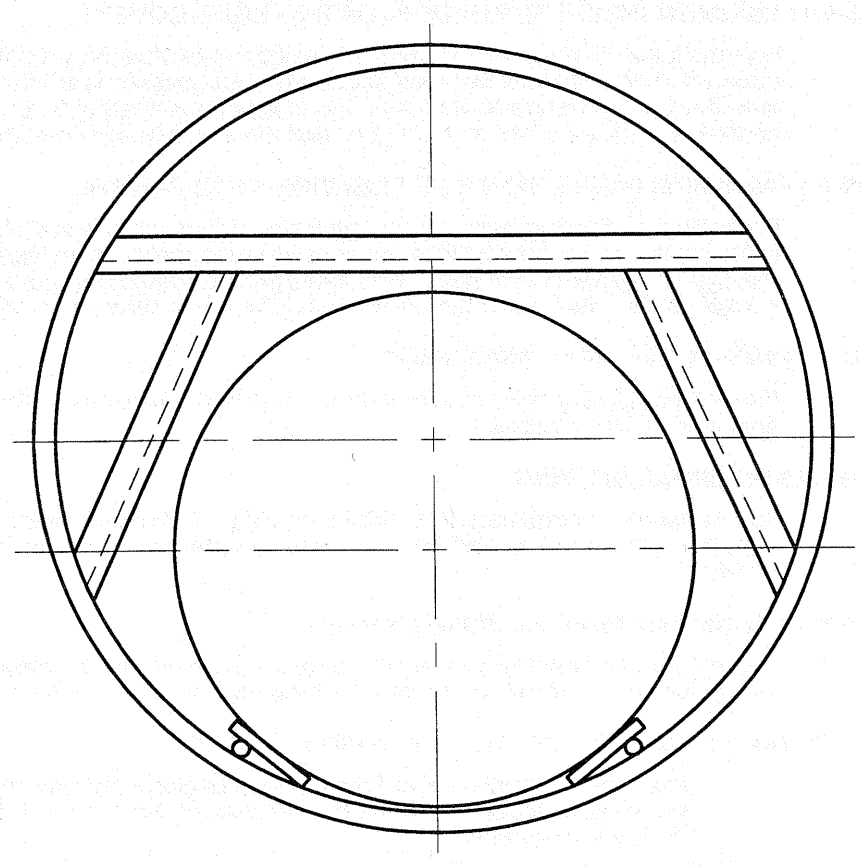

CROSS-SECTION END VIEW OF TUBE BUNDLE AND SHELL

RCB-5 FLOATING END CONSTRUCTION

RCB-5.1 INTERNAL FLOATING HEADS (Types S and T)

R-5.11 MINIMUM INSIDE DEPTH OF FLOATING HEAD COVERS

For multipass floating head covers the inside depth shall be such that the minimum cross-over area for flow between successive tube passes is at least equal to 1.3 times the flow area through the tubes of one pass. For single pass floating head covers the depth at nozzle centerline shall be a minimum of one-third the inside diameter of the nozzle.

CB-5.11 MINIMUM INSIDE DEPTH OF FLOATING HEAD COVERS

For multipass floating head covers the inside depth shall be such that the minimum cross-over area for flow between successive tube passes is at least equal to the flow area through the tubes of one pass. For single pass floating head covers the depth at nozzle centerline shall be a minimum of one-third the inside diameter of the nozzle.

RCB-5.12 POSTWELD HEAT TREATMENT

Fabricated floating head covers shall be postweld heat treated when required by the Code or specified by the purchaser.

RCB-5.13 INTERNAL BOLTING

The materials of construction for internal bolting for floating heads shall be suitable for the mechanical design and similar in corrosion resistance to the materials used for the shell interior.

RCB-5.14 FLOATING HEAD BACKING DEVICES

The material of construction for split rings or other internal floating head backing devices shall be equivalent in corrosion resistance to the material used for the shell interior.

RCB-5.141 BACKING DEVICE THICKNESS (TYPE S)

The required thickness of floating head backing devices shall be determined by the following formulas or minimum thickness shown in Figure RCB-5.141, using whichever thickness is greatest.

BENDING

$$T = \left[\frac{(W)(H)(Y)}{(B)(S)}\right]^{1/2}$$ For Style "A", "C" & "D", inches

Metric $$T = \left[\frac{(W)(H)(Y)}{(B)(S)}\right]^{1/2} x\,10^{3}$$, mm

$$T = \left[\frac{2(W)(H)(Y)}{(B)(S)}\right]^{1/2}$$ For Style "B", inches

Metric $$T = \left[\frac{2(W)(H)(Y)}{(B)(S)}\right]^{1/2} x\,10^{3}$$, mm

SHEAR

$$t = \frac{W}{(\pi)(Z)(S_s)}$$, inches

Metric $$t = \frac{W}{(\pi)(Z)(S_s)} x\,10^{6}$$, mm

where

A = Ring OD, inches (mm)

B = As shown in Fig. RCB-5.141, inches (mm)

C = Bolt circle, inches (mm)

H = $(C - B)/2$, inches (mm)

W = Design bolt load (as ref. in Code Appendix 2), lb. (kN)

Y = From Code Fig. 2-7.1 using $K = A/B$

Z = Tubesheet OD, inches (mm)

L = Greater of T or t, inches (mm)

S = Code allowable stress in tension (using shell design temperature), psi (kPa)

S_{br} = S of backing ring, psi (kPa)
S_{kr} = S of split key ring, psi (kPa)
S_{ts} = S of tubesheet, psi (kPa)

$S_s = 0.8S$, psi (kPa)

NOTES

1. All references above are to ASME Code Section VIII, Division 1.
2. Caution: For styles "A", "B" & "D" check thickness in shear of the tubesheet if $S_{ts} < S_{br}$
3. Caution: Style "C" check thickness in shear of the tubesheet if $S_{ts} < S_{kr}$

See Figure RCB-5.141 for illustration of suggested styles. Other styles are permissible.

FIGURE RCB 5.141

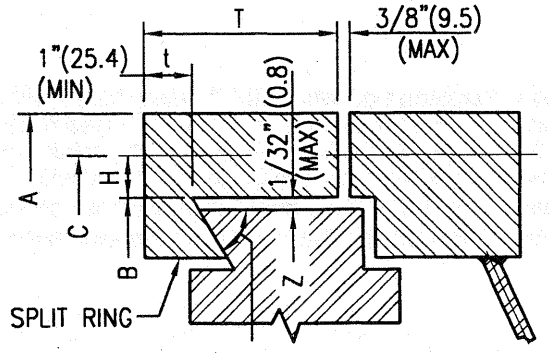

STYLE "A"

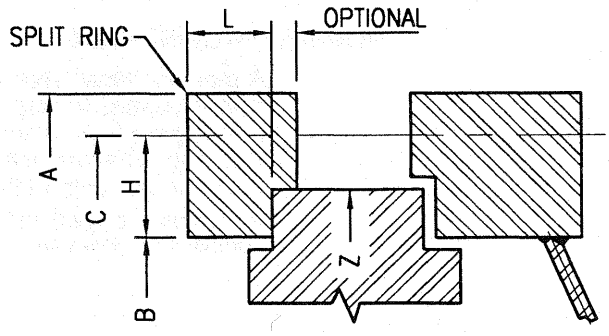

STYLE "B"

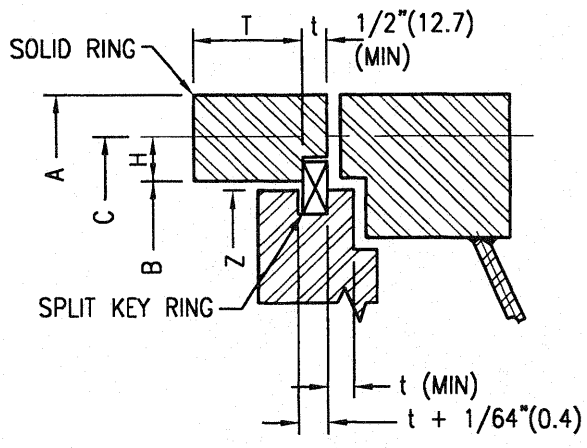

STYLE "C"

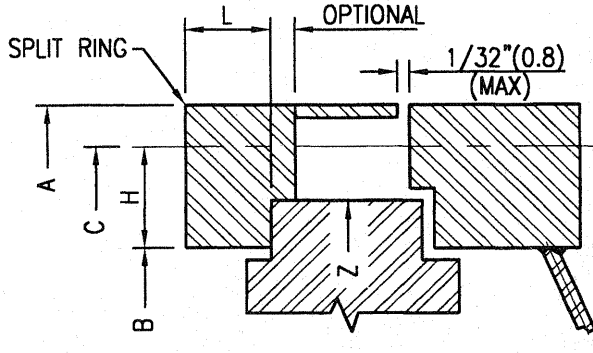

STYLE "D"

RCB-5.15 TUBE BUNDLE SUPPORTS

When a removable shell cover is utilized, a partial support plate, or other suitable means, shall be provided to support the floating head end of the tube bundle. If a plate is used, the thickness shall equal or exceed the support plate thickness specified in Table R-4.41 or CB-4.41 as applicable for unsupported tube lengths over 60 inches (1524 mm).

RCB-5.16 FLOATING HEAD NOZZLES

The floating head nozzle and packing box for a single pass exchanger shall comply with the requirements of Paragraphs RCB-5.21, RCB-5.22 and RCB-5.23.

RCB-5.17 PASS PARTITION PLATES

The nominal thickness of floating head pass partitions shall be identical to those shown in RCB-9.13 for channels and bonnets.

RCB-5.2 OUTSIDE PACKED FLOATING HEADS (Type P)

RCB-5.21 PACKED FLOATING HEADS

The cylindrical surface of packed floating head tubesheets and skirts, where in contact with packing (including allowance for expansion), shall be given a fine machine finish equivalent to 63 microinches.

RCB-5.22 PACKING BOXES

A machine finish shall be used on the shell or packing box where the floating tubesheet or nozzle passes through. If packing of braided material is used, a minimum of three rings of packing shall be used for 150 PSI (1034 kPa) maximum design pressure and a minimum of four rings shall be used for 300 PSI (2068 kPa) maximum design pressure. For pressures less than 150 PSI (1034 kPa), temperatures below 300° F (149° C), and non-hazardous service, fewer rings of packing may be used. Figure RCB-5.22 and Table RCB-5.22 show typical details and dimensions of packing boxes.

FIGURE RCB-5.22

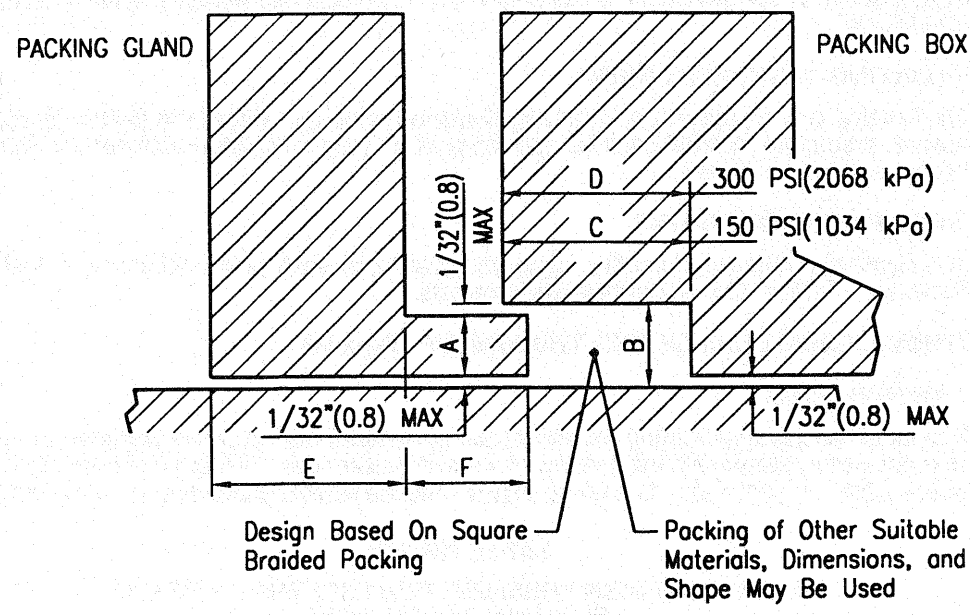

TABLE RCB-5.22

TYPICAL DIMENSIONS FOR PACKED FLOATING HEADS

150 PSI(1034 kPa) AND 300 PSI(2068 kPa) WITH 600 ° F (316 ° C) MAX. TEMP.

Dimensions in Inches

SIZE	A	B	C	D	E (MIN)	F	BOLTS NO.	BOLTS SIZE
6 - 8	3/8	7/16	1-1/4	1-5/8	1	3/4	4	5/8
9 - 13	3/8	7/16	1-1/4	1-5/8	1	3/4	6	5/8
14 - 17	3/8	7/16	1-1/4	1-5/8	1	3/4	8	5/8
18 - 21	3/8	7/16	1-1/4	1-5/8	1	3/4	10	5/8
22 - 23	3/8	7/16	1-1/4	1-5/8	1	3/4	12	5/8
24 - 29	1/2	9/16	1-3/4	2-1/4	1-1/8	1	16	5/8
30 - 33	1/2	9/16	1-3/4	2-1/4	1-1/8	1	20	5/8
34 - 43	1/2	9/16	1-3/4	2-1/4	1-1/8	1	24	5/8
44 - 51	5/8	11/16	2-1/8	2-3/4	1-1/4	1-1/4	28	5/8
52 - 60	5/8	11/16	2-1/8	2-3/4	1-1/4	1-1/4	32	5/8

Dimensions in Millimeters

SIZE	A	B	C	D	E (MIN)	F	BOLTS NO.	BOLTS SIZE
152-203	9.53	11.11	31.75	41.28	25.40	19.05	4	M16
229-330	9.53	11.11	31.75	41.28	25.40	19.05	6	M16
356-432	9.53	11.11	31.75	41.28	25.40	19.05	8	M16
457-533	9.53	11.11	31.75	41.28	25.40	19.05	10	M16
559-584	9.53	11.11	31.75	41.28	25.40	19.05	12	M16
610-737	12.70	14.29	44.45	57.15	28.58	25.40	16	M16
762-838	12.70	14.29	44.45	57.15	28.58	25.40	20	M16
864-1092	12.70	14.29	44.45	57.15	28.58	25.40	24	M16
1118-1295	15.88	17.46	53.98	69.85	31.75	31.75	28	M16
1321-1524	15.88	17.46	53.98	69.85	31.75	31.75	32	M16

Note: Nominal size of packing is same as dimension "A"

RCB-5.23 PACKING MATERIAL

Purchaser shall specify packing material which is compatible with the shell side process conditions.

RCB-5.24 FLOATING TUBESHEET SKIRT

The floating tubesheet skirt normally shall extend outward. When the skirt must extend inward, a suitable method shall be used to prevent stagnant areas between the shell side nozzle and the tubesheet.

RCB-5.25 PASS PARTITION PLATES

The nominal thickness of floating head pass partitions shall be identical to those shown in Paragraph RCB-9.13 for channels and bonnets.

RCB-5.3 EXTERNALLY SEALED FLOATING TUBESHEET (Type W)

RB-5.31 LANTERN RING

The externally sealed floating tubesheet using square braided packing materials shall be used only for water, steam, air, lubricating oil, or similar services. Design temperature shall not exceed 375 ° F (191 ° C) . Design pressure shall be limited according to Table RB-5.31.

TABLE RB-5.31

MAXIMUM DESIGN PRESSURE FOR EXTERNALLY SEALED FLOATING TUBESHEETS

Nominal Shell Inside Diameter Inches (mm)	Maximum Design Pressure PSI (kPa)
6 - 24 (152-610)	300 (2068)
25 - 42 (635-1067)	150 (1034)
43 - 60 (1092-1524)	75 (517)
61 - 100 (1549-2540)	50 (345)

C-5.31 LANTERN RING

The externally sealed floating tubesheet shall be used only for water, steam, air, lubricating oil, or similar services. Design temperature, pressure and shell diameter shall be limited by the service, joint configuration, packing material and number of packing rings, to a maximum design pressure of 600 psi (4137 kPa).

RCB-5.32 LEAKAGE PRECAUTIONS

The design shall incorporate provisions in the lantern ring so that any leakage past the packing will leak to atmosphere. When endless packing rings are used, one ring of packing shall be used on each side of the lantern ring. For braided packing materials with a seam, a minimum of two rings of packing shall be used on each side of the lantern ring, with the seams staggered during assembly.

RCB-5.33 PACKING MATERIAL

Purchaser shall specify packing material which is compatible with the process conditions.

RCB-5.34 SPECIAL DESIGNS

Special designs incorporating other sealing devices may be used for the applications in Paragraph RB-5.31 and C-5.31 or other special service requirements. Provisions for leak detection shall be considered.

RCB-6 GASKETS

RCB-6.1 TYPE OF GASKETS

Gaskets shall be selected which have a continuous periphery with no radial leak paths. This shall not exclude gaskets made continuous by welding or other methods which produce a homogeneous bond.

R-6.2 GASKET MATERIALS

Metal jacketed or solid metal gaskets shall be used for internal floating head joints, all joints for pressures of 300 psi (2068 kPa) and over, and for all joints in contact with hydrocarbons. Other gasket materials may be specified by agreement between purchaser and manufacturer to meet special service conditions and flange design. When two gasketed joints are compressed by the same bolting, provisions shall be made so that both gaskets seal, but neither gasket is crushed at the required bolt load.

CB-6.2 GASKET MATERIALS

For design pressures of 300 psi (2068 kPa) and lower, composition gaskets may be used for external joints, unless temperature or corrosive nature of contained fluid indicates otherwise. Metal jacketed, filled or solid metal gaskets shall be used for all joints for design pressures greater than 300 psi (2068 kPa) and for internal floating head joints. Other gasket materials may be specified by agreement between purchaser and manufacturer to meet special service conditions and flange design. When two gasketed joints are compressed by the same bolting, provisions shall be made so that both gaskets seal, but neither gasket is crushed at the required bolt load.

RCB-6.3 PERIPHERAL GASKETS

RC-6.31

The minimum width of peripheral ring gaskets for external joints shall be 3/8" (9.5 mm) for shell sizes through 23 inches (584 mm) nominal diameter and 1/2" (12.7 mm) for all larger shell sizes.

B-6.31

The minimum width of peripheral ring gaskets for external joints shall be 3/8" (9.5 mm) for shell sizes through 23 inches (584 mm) nominal diameter and 1/2" (12.7 mm) for all larger shell sizes. Full face gaskets shall be used for all cast iron flanges.

RCB-6.32

The minimum width of peripheral ring gaskets for internal joints shall be 1/4" (6.4 mm) for all shell sizes.

R-6.33

Peripheral gasket contact surfaces shall have a flatness tolerance of ± 1/32" (0.8 mm) maximum deviation from any reference plane. This maximum deviation shall not occur in less than a 20 ° (0.3 Rad) arc.

CB-6.33

Flatness of peripheral gasket contact surfaces shall be sufficient to meet the requirements of Paragraph RCB-1.3.

RCB-6.4 PASS PARTITION GASKETS

The width of gasket web for pass partitions of channels, bonnets, and floating heads shall be not less than 1/4" (6.4 mm) for shell sizes through 23 inches (584 mm) nominal diameter and not less than 3/8" (9.5 mm) for all larger shell sizes.

R-6.5 GASKET JOINT DETAILS

Gasketed joints shall be of a confined type.

CB-6.5 GASKET JOINT DETAILS

Gasket joints shall be of a confined or unconfined type.

FIGURE RCB-6.5

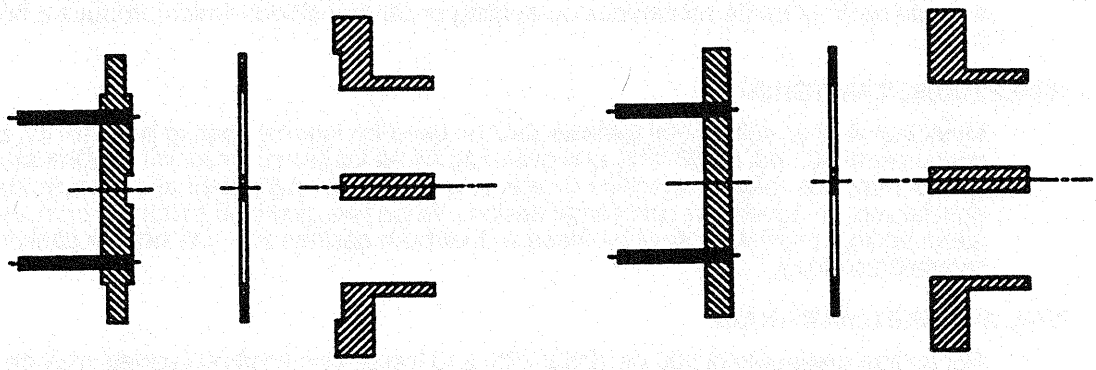

Confined Gasket Unconfined Gasket

For dimensions and tolerances, see Figure F-3.

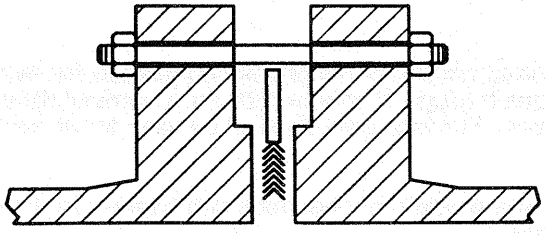

Confined Gasket

SPIRAL WOUND GASKET WITH OUTER METAL RING

RCB-6.6 SPARE GASKETS

Unless specifically stated otherwise, spare gaskets include only main body flange gaskets.

RCB-7 TUBESHEETS

RCB-7.1 TUBESHEET THICKNESS

RCB-7.11 APPLICATION INSTRUCTIONS AND LIMITATIONS

Subject to the requirements of the Code, the formulas and design criteria contained in Paragraphs RCB-7.1 through RCB-7.25 are applicable, with limitations noted, when the following normal design conditions are met:

(1) Size and pressure are within the scope of the TEMA Mechanical Standards, Paragraph RCB-1.1

(2) Tube-to-tubesheet joints are expanded, welded or otherwise constructed such as to effectively contribute to the support of the tubesheets (except U-tube tubesheets)

(3) Tubes are uniformly distributed (no large untubed areas)

Abnormal conditions of support or loading are considered Special Cases, and are defined in Paragraph RCB-7.3 which is referenced, when pertinent, in subsequent paragraphs.

RCB-7.12 EFFECTIVE TUBESHEET THICKNESS

Except as qualified by Paragraphs RCB-7.121 and 7.122, the effective tubesheet thickness shall be the thickness measured at the bottom of the tube side pass partition groove and/or shell side longitudinal baffle groove minus corrosion allowance in excess of the groove depths.

RCB-7.121 APPLIED TUBESHEET FACINGS

The thickness of applied facing material shall not be included in the minimum or effective tubesheet thickness.

RCB-7.122 INTEGRALLY CLAD TUBESHEETS

The thickness of cladding material in integrally clad plates and cladding deposited by welding may be included in the effective tubesheet thickness as allowed by the Code.

RCB-7.13 REQUIRED EFFECTIVE TUBESHEET THICKNESS

The required effective tubesheet thickness for any type of heat exchanger shall be determined from the following paragraphs, for both tube side and shell side conditions, corroded or uncorroded, using whichever thickness is greatest. Both tubesheets of fixed tubesheet exchangers shall have the same thickness, unless the provisions of Paragraph RCB-7.166 are satisfied.

R-7.131 MINIMUM TUBESHEET THICKNESS WITH EXPANDED TUBE JOINTS

In no case shall the total thickness minus corrosion allowance, in the areas into which tubes are to be expanded, of any tubesheet be less than the outside diameter of tubes. In no case shall the total tubesheet thickness, including corrosion allowance, be less than 3/4" (19.1 mm).

C-7.131 MINIMUM TUBESHEET THICKNESS WITH EXPANDED TUBE JOINTS

In no case shall the total thickness minus corrosion allowance, in the areas into which tubes are to be expanded, of any tubesheet be less than three-fourths of the tube outside diameter for tubes of 1" (25.4 mm) OD and smaller, 7/8" (22.2 mm) for 1-1/4" (31.8 mm) OD, 1" (25.4 mm) for 1-1/2" (38.1 mm) OD, or 1-1/4" (31.8 mm) for 2" (50.8 mm) OD.

B-7.131 MINIMUM TUBESHEET THICKNESS WITH EXPANDED TUBE JOINTS

In no case shall the total thickness minus corrosion allowance, in the areas into which tubes are to be expanded, of any tubesheet be less than three-fourths of the tube outside diameter for tubes of 1" (25.4 mm) OD and smaller, 7/8" (22.2 mm) for 1-1/4" (31.8 mm) OD, 1" (25.4) for 1-1/2" (38.1 mm) OD, or 1-1/4" (31.8 mm) for 2" (50.8 mm) OD. In no case shall the total tubesheet thickness, including corrosion allowance, be less than 3/4" (19.1 mm).

RCB-7.132 TUBESHEET FORMULA - BENDING

$$T = \frac{FG}{3}\sqrt{\frac{P}{\eta S}}$$

where

T = Effective tubesheet thickness, inches (mm).

S = Code allowable stress in tension, psi (kPa), for tubesheet material at design metal temperatures. (See Paragraph RCB-1.42).

P =

For outside packed floating head exchangers (Type P), P shall be as defined in Paragraph RCB-7.141, psi (kPa).

For packed floating end exchangers with lantern ring (Type W), for the floating tubesheet, P shall be as defined in Paragraph RCB-7.142, psi (kPa).

For fixed tubesheet exchangers, P shall be as defined in Paragraph RCB-7.163, RCB-7.164 or RCB-7.165, psi (kPa).

For other type exchangers, P shall be the design pressure, shell side or tube side, corrected for vacuum when present on the opposite side, or differential pressure when specified by the purchaser, psi (kPa).

For U-tube tubesheets (Type U), where the tubesheet is extended as a flange for bolting to heads or shells with ring type gaskets, $P = P_s + P_b$ or $P_t + P_b$ depending upon the side under consideration.

where

$$P_b = \frac{-6.2\ M^*}{F^2\ G^3}$$

and M^* is defined in Paragraph RCB-7.1342, psi (kPa).

For floating tubesheets (Type T), where the tubesheet is extended for bolting to heads with ring type gaskets, the effect of the moment acting upon the extension is defined in Paragraph RCB-7.162 in terms of equivalent tube side and shell side bolting pressures except G shall be the gasket G of the floating tubesheet. P psi (kPa) is given by the greatest absolute value of the following:

$$P = P_t + P_{Bt}$$

or $P = P_s - P_{Bs}$

or $P = P_t$

or $P = P_s$

G =

G shall be either in the corroded or uncorroded condition, dependent upon which condition is under consideration.

For fixed tubesheet exchangers, G shall be the shell inside diameter.

For kettle type exchangers, G shall be the port inside diameter.

For any floating tubesheet (except divided), G shall be the G used for the stationary tubesheet using the P as defined for other type exchangers.

Type T tubesheets shall also be checked using the pressure P defined above with bolting and using the actual gasket G of the floating tubesheet

For a divided floating tubesheet, G shall be 1.41(d) where d is the length of the shortest span measured over centerlines of gaskets.

For other type exchangers, G shall be the diameter, inches (mm), over which the pressure under consideration is acting. (e.g.: Pressure acting on the gasketed side of a tubesheet, G = the diameter at the location of the gasket load reaction as defined in the Code. Pressure acting on an integral side of a tubesheet, G = the inside diameter of the integral pressure part.)

$$\eta = \begin{cases} 1 - \dfrac{0.785}{\left(\dfrac{Pitch}{Tube\,OD}\right)^2} & \text{for square or rotated square tube patterns} \\ 1 - \dfrac{0.907}{\left(\dfrac{Pitch}{Tube\,OD}\right)^2} & \text{for triangular or rotated triangular tube patterns} \end{cases}$$

For integrally finned tubes, the OD of the tube in the tubesheet shall be used.

$F =$

For unsupported tubesheets (e.g.: U-tube tubesheets) gasketed both sides, $F = 1.25$.

For supported tubesheets (e.g.: fixed tubesheets and floating type tubesheets) gasketed both sides, $F = 1.0$.

For unsupported tubesheets (e.g.: U-tube tubesheets) integral with either or both sides, F shall be the value determined by the curve U in Figure RCB-7.132.

For supported tubesheets (e.g.: fixed tubesheets and floating type tubesheets) integral with either or both sides, F shall be the value determined by the curve H in Figure RCB-7.132.

FIGURE RCB-7.132

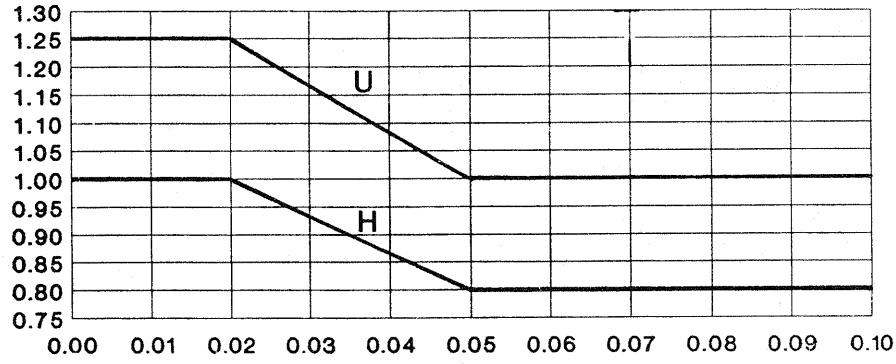

NOTE: If the tubesheet is integral with both the tube side and shell side, Wall Thickness and ID are to be based on the side yielding the smaller value of F.

See Table RCB-7.132 for illustration of the application of the above equations.

TABLE RCB - 7.132

	TUBESHEET THICKNESS FOR BENDING			
	$T = \frac{FG}{3}\sqrt{\frac{P}{\eta S}}$ Note: Must be calculated for shell side or tube side pressure, whichever is controlling.			
	For □ ◇ Tube pattern $\eta = 1 - \left[\frac{0.785}{\left(\frac{Pitch}{Tube\ OD}\right)^2}\right]$ For integrally finned tubes, the OD of the tube in the tubesheet shall be used	For ▷ △ Tube pattern $\eta = 1 - \left[\frac{0.907}{\left(\frac{Pitch}{Tube\ OD}\right)^2}\right]$ For integrally finned tubes, the OD of the tube in the tubesheet shall be used		S = Code allowable stress in tension, psi (kPa), for tubesheet material at design metal temperature. (See Paragraph RCB-1.42.)
	F	G		P
		Shell Side Pressure	Tube Side Pressure	
(a) 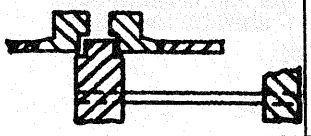	1.0	Gasket G shell side See note 1	Gasket G tube side See note 1	Design pressure, psi (kPa), shell side or tube side, per Paragraph RCB-7.132 corrected for vacuum when present on opposite side or differential pressure when specified by customer.
(b) 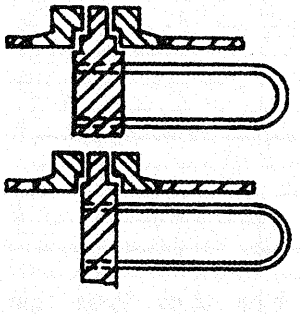	1.25	Gasket G shell side See note 1	Gasket G tube side See note 1	Design pressure, psi (kPa), shell side or tube side, per Paragraph RCB-7.132 corrected for vacuum when present on opposite side or differential pressure when specified by customer.
(c) 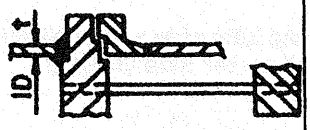	See Figure RCB-7.132 $F = \frac{\left[17 - 100\left(\frac{t}{ID}\right)\right]}{15}$ Note: F Max = 1.0 F Min = 0.8	Gasket G shell side See note 1	Channel ID	Design pressure, psi (kPa), shell side or tube side, per RCB-7.132 corrected for vacuum when present on opposite side or differential pressure when specified by customer, or fixed tubesheet type units, as defined in Paragraphs RCB-7.163 thru RCB-7.165
(d) 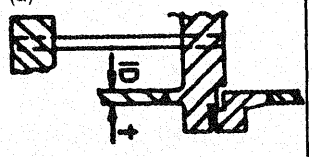		Shell ID or port inside diameter for kettle type exchangers	Gasket G (shell ID if fixed tubesheet type unit) See note 1	
(e) 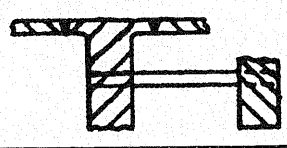		Shell ID or port inside diameter for kettle type exchangers	Channel ID (shell ID if fixed tubesheet type unit)	

Table RCB - 7.132 continued next page

TABLE RCB - 7.132 (Continued)

	F	G		P
		Shell Side Pressure	Tube Side Pressure	
(f) 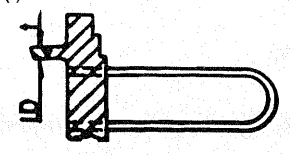	See Figure RCB-7.132 $F = \frac{\left[17 - 100\left(\frac{t}{ID}\right)\right]}{12}$ Note: F Max = 1.25 F Min = 1.00	Gasket G shell side See note 1	Channel ID	Design pressure, psi (kPa), shell side, or tube side, per Paragraph RCB-7.132 corrected for vacuum when present on opposite side, or differential pressure when specified by customer.
(g) 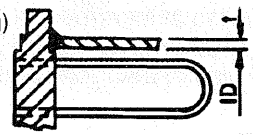		Shell ID or port inside diameter for kettle type exchangers	Gasket G tube side See note 1	
(h) 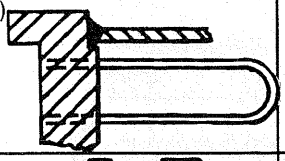		Shell ID or port inside diameter for kettle type exchangers	Channel ID	
(i) 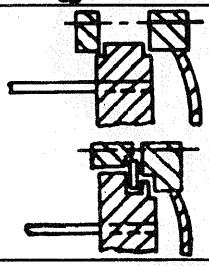	1.0	Same G as used for stationary tubesheet		Design pressure, psi (kPa), shell side, or tube side, per Paragraph RCB-7.132 corrected for vacuum when present on opposite side, or differential pressure when specified by customer.
(j) 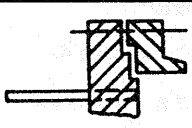	1.0	Same G as used for stationary tubesheet. Also check using gasket G of the floating tubesheet See note 1		See Paragraph RCB-7.132
(k) 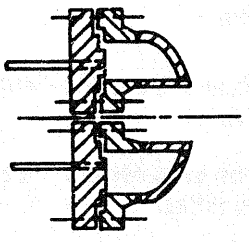	1.0	$G = 1.41(d)$ d = Shortest span measured over center lines of gaskets.		Design pressure, psi (kPa), shell side, or tube side, per Paragraph RCB-7.132 corrected for vacuum when present on opposite side, or differential pressure when specified by customer.
(l) 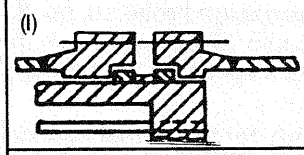	1.0	Same G as used for stationary tubesheet		Design pressure, psi (kPa), tube side per paragraph RCB-7.132 corrected for vacuum when present on the shell side.
(m) 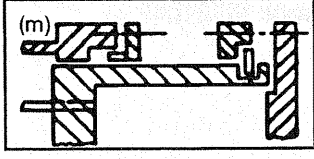	1.0	Same G as used for stationary tubesheet		Defined in Paragraph RCB-7.1411

Notes:
1. Gasket G =the diameter at the location of the gasket load reaction as defined in the Code.

RCB-7.133 TUBESHEET FORMULA - SHEAR

$$T = \frac{0.31 \quad D_L}{\left(1 - \frac{d_o}{Pitch}\right)}\left(\frac{P}{S}\right)$$

where

T = Effective tubesheet thickness, inches (mm)

$D_L = \frac{4A}{C}$ = Equivalent diameter of the tube center limit perimeter, inches (mm)

C = Perimeter of the tube layout measured stepwise in increments of one tube pitch from center-to-center of the outermost tubes, inches (mm). Figure RCB-7.133 shows the application to typical triangular and square tube patterns

FIGURE RCB-7.133

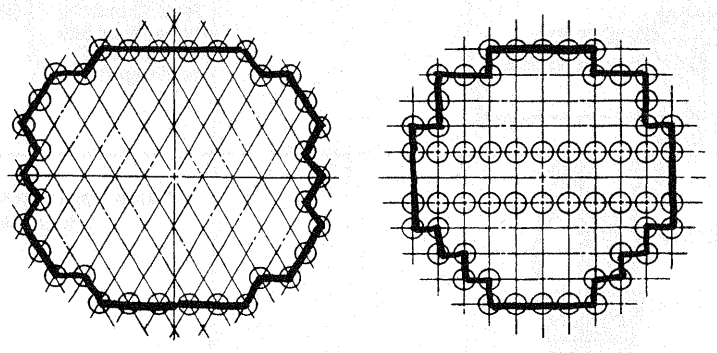

"C" (perimeter) is the length of the heavy line

A = Total area enclosed by perimeter C, square inches (mm^2)

d_o = Outside tube diameter, inches (mm), for integrally finned tubes, the OD of the tube in the tubesheet shall be used.

$Pitch$ = Tube center-to-center spacing, inches (mm)

P = For outside packed floating head exchangers (Type P), P shall be as defined in Paragraph RCB-7.141, psi (kPa).

For fixed tubesheet exchangers, P shall be as defined in Paragraphs RCB-7.163, RCB-7.164 or RCB-7.165, psi (kPa).

For other type exchangers, P shall be the design pressure, psi (kPa), shell side or tube side, corrected for vacuum when present on the opposite side, or differential pressure when specified by the purchaser.

S = Code allowable stress in tension, psi (kPa), for tubesheet material at design metal temperature. (See Paragraph RCB-1.42.)

NOTE: Shear will not control when

$$\frac{P}{S} < 1.6\left(1 - \frac{d_o}{Pitch}\right)^2$$

See Table RCB-7.133 for illustration of the application of the above equations.

TABLE RCB-7.133

	TUBESHEET THICKNESS FOR SHEAR		
	$T = \left[\frac{0.31 \quad D_L}{\left(1 - \frac{d_o}{Pitch}\right)}\right]\left(\frac{P}{S}\right)$ Note: Must be calculated for shell side or tube side pressure, whichever is controlling.		
	d_0 = Outside tube diameter, inches (mm). For integrally finned tubes, the OD of the tube in the tubesheet shall be used.	$Pitch$ = Tube spacing, center-to-center, inches (mm).	S = Code allowable stress in tension, psi (kPa). For tubesheet material at design metal temperature. (See paragraph RCB-1.42.)
	P		D_L
(a) 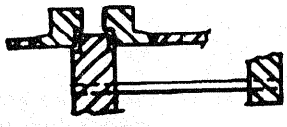	Design pressure, psi (kPa), shell side or tube side, corrected for vacuum when present on opposite side, or differential pressure when specified by customer		$D_L = 4\left(\frac{A}{C}\right)$
(b) 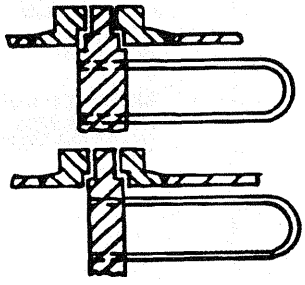	Design pressure, psi (kPa), shell side or tube side, corrected for vacuum when present on opposite side, or differential pressure when specified by customer		C = Perimeter of tube layout measured stepwise in increments of one tube-to-tube pitch center-to-center of the outermost tubes, in inches (mm). See Figure RCB-7.133 A = total area enclosed by C in square inches (mm ^{2}). See Figure RCB-7.133
(c) 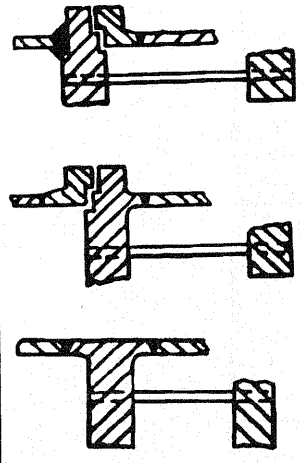	Design pressure, psi (kPa), shell side or tube side, corrected for vacuum when present on opposite side, or differential pressure when specified by customer, or for fixed tubesheet type units, as defined in paragraphs RCB-7.163 thru RCB-7.165		

TABLE RCB-7.133 Continued next page

TABLE RCB-7.133 Continued

	P	D_L
(d) 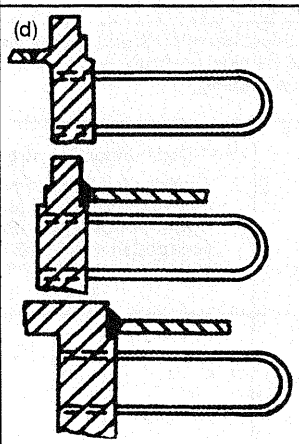	Design pressure, psi (kPa), shell side or tube side, corrected for vacuum when present on opposite side, or differential pressure when specified by customer	$D_L = 4\left(\frac{A}{C}\right)$ C = Perimeter of tube layout measured stepwise in increments of one tube-to-tube pitch center-to-center of the outermost tubes, in inches (mm). See Figure RCB-7.133 A = total area enclosed by C in square inches (mm^2). See Figure RCB-7.133
(e) 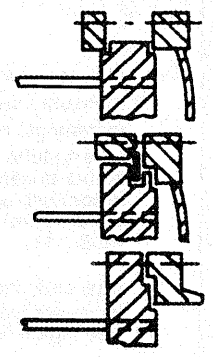	Design pressure, psi (kPa). Shell side or tube side, corrected for vacuum when present on opposite side, or differential pressure when specified by customer	
(f) 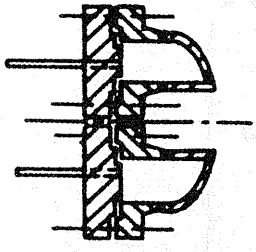	Design pressure, psi (kPa), shell side or tube side, corrected for vacuum when present on opposite side, or differential pressure when specified by customer	
(g) 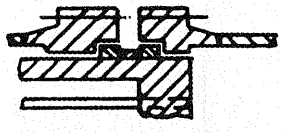	Design pressure, psi (kPa), tube side, corrected for vacuum when present on the shell side	
(h) 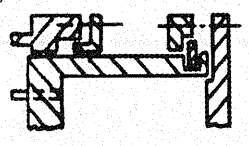	Defined in Paragraph RCB-7.1412	

RCB-7.134 TUBESHEET FORMULA - TUBESHEET FLANGED EXTENSION

This paragraph is applicable only when bolt loads are transmitted, at the bolt circle, to the extended portion of a tubesheet. The peripheral portion extended to form a flange for bolting to heads or shells with ring type gaskets may differ in thickness from that portion inside the shell calculated in Paragraph RCB-7.132. The minimum thickness of the extended portion may be calculated from the following paragraphs.

RCB-7.1341 FIXED TUBESHEET OR FLOATING TUBESHEET EXCHANGERS

$$T_r = 0.98\left[\frac{M\ (r^2 - 1 + 3.71 r^2\ ln\ r)}{S\ (A-G)(1+1.86\ r^2)}\right]^{1/2}$$

where

T_r = Minimum thickness of the extended portion, inches (mm)

A = Outside diameter of the tubesheet, inches (mm)

$$r = \frac{A}{G}$$

M = the larger of M_1 or M_2 as defined in Paragraph RCB-7.162

Note: The moments may differ from the moments acting on the attached flange.

S and G are defined in Paragraph RCB-7.132

RCB-7.1342 U-TUBE TUBESHEET EXCHANGERS

$$T_r = 1.38\left[\frac{M^* + M + 0.39\ P\ G^2\ w}{(A-G)\ S}\right]^{1/2}$$

where

T_r = Minimum thickness of the extended portion, inches (mm)

$$M^* = \frac{\frac{0.069}{\eta} w F^3 P G^3 \left(\frac{T_r}{T}\right)^3 - MG - 0.39 w P G^3}{G + \frac{1.37}{\eta}\left(\frac{T_r}{T}\right)^3 w}$$

T = Effective tubesheet thickness calculated from Paragraph RCB-7.132, inches (mm)

$$w = \frac{(A-G)}{2}$$

M = the larger of M_1 or M_2 as defined in Paragraph RCB-7.162

Note: The moments may differ from the moments acting on the attached flange.

F, G and η are defined in Paragraph RCB-7.132

$P = P_s$ or P_t or maximum differential pressure, as applicable.

Note: See Paragraph RCB-7.13421 for procedure.

RCB-7.13421 ITERATIVE CALCULATION METHODS

Method 1

(1) Calculate M^* assuming $T_r = T$.

(2) Calculate P_b then P from Paragraph RCB-7.132.

(3) Calculate T from Paragraph RCB-7.132.

(4) Calculate T_r from Paragraph RCB-7.1342.

(5) Compare T and T_r; if T is greater than T_r, calculation is terminated. Use T_r calculated. Do not proceed to Step (6).

(6) If T_r is greater than T, or if it is desired to reduce T_r below T, select a new ratio of T_r / T that is less than 1 and repeat Steps (1) through (5). (Note: T_r / T ratio is calculated using actual corroded thickness of the part).

Method 2 - (ALTERNATIVE METHOD)

(1) Set $M^* = -M$.

(2) Calculate P_b then P from Paragraph RCB-7.132.

(3) Calculate T from Paragraph RCB-7.132.

(4) Calculate T_r from Paragraph RCB-7.1342.

(5) Recalculate $M^* = -M$ using values of T and T_r obtained in Steps (3) and (4) and as defined in Paragraph RCB-7.1342. (Note T_r / T must be ≤ 1).

(6) If $|M^*|$ obtained in Step (5) is less than $|M|$ from Step (1), calculation is terminated. Use T_r calculated in Step (4). Do not proceed to Step (7).

(7) If $|M^*|$ obtained from Step (5) is greater than $|M|$ from Step (1), repeat Step (2) using M^* calculated in Step (5). Then repeat Steps (3) through (5).

(8) If last calculated $|M^*|$ is less than the previous $|M^*|$ used to calculate P_b, calculation is terminated. Use last calculated value of T_r.

(9) If last calculated $|M^*|$ is greater than the previous $|M^*|$ used to calculate P_b, repeat Step (2) using last calculated M^*. Then repeat Steps (3) through (5). Continue this process until Step (8) is satisfied.

RCB-7.14 PACKED FLOATING TUBESHEET TYPE EXCHANGERS EFFECTIVE PRESSURE

RCB-7.141 OUTSIDE PACKED FLOATING HEAD (TYPE P)

The thickness of tubesheets in exchangers whose floating heads are packed at the outside diameter of the tubesheet or a cylindrical extension thereof shall be calculated like stationary tubesheets using the formulas for P as defined below.

RCB-7.1411 EFFECTIVE DESIGN PRESSURE - BENDING

The effective design pressure to be used with the formula shown in Paragraph RCB-7.132 is given by:

$$P = P_t + P_s\left[\frac{1.25(D^2 - D_c{}^2)(D - D_c)}{DF^2G^2}\right]$$

where

P_t = Design pressure, psi (kPa), tube side
(For vacuum design, P_t is negative.)

P_s = Design pressure, psi (kPa), shell side
(For vacuum design, P_s is negative.)

D = Outside diameter of the floating tubesheet, inches (mm)

$D_c = \sqrt{\frac{4A}{\pi}}$ Equivalent diameter of the tube center limit perimeter, inches (mm), using A as defined in Paragraph RCB-7.133

F and G are as defined in Paragraph RCB-7.132

RCB-7.1412 EFFECTIVE DESIGN PRESSURE - SHEAR

The effective design pressure to be used with the formula shown in Paragraph RCB-7.133 is given by:

$$P = P_t + P_s\left(\frac{D^2 - D_c{}^2}{D_c{}^2}\right)$$

using terms as defined in Paragraph RCB-7.1411.

RCB-7.142 PACKED FLOATING TUBESHEET WITH LANTERN RING (TYPE W)

The thickness of floating tubesheets in exchangers whose floating tubesheets are packed at the outside diameter with return bonnet or channel bolted to the shell flange, shall be calculated as for gasketed stationary tubesheet exchangers, using P defined as the tube side design pressure, psi (kPa), corrected for vacuum when present on the shell side. It is incorrect to utilize the shell side pressure.

RCB-7.15 DOUBLE TUBESHEETS

Double tubesheets may be used where the operating conditions indicate their desirability. The diversity of construction types makes it impractical to specify design rules for all cases. Paragraphs RCB-7.154, RCB-7.155 and RCB-7.156 provide the design rules for determining the thickness of double tubesheets for some of the most commonly used construction types.

RCB-7.151 MINIMUM THICKNESS

Neither component of a double tubesheet shall have a thickness less than that required by Paragraph RCB-7.131.

RCB-7.152 VENTS AND DRAINS

Double tubesheets of the edge welded type shall be provided with vent and drain connections at the high and low points of the enclosed space.

RCB-7.153 SPECIAL PRECAUTIONS

When double tubesheets are used, special attention shall be given to the ability of the tubes to withstand, without damage, the mechanical and thermal loads imposed on them by the construction.

RCB-7.154 INTEGRAL DOUBLE TUBESHEETS

The tubesheets are connected in a manner which distributes axial load and radial thermal expansion loads between tubesheets by means of an interconnecting element capable of preventing individual radial growth of tubesheets. It is assumed that the element is rigid enough to mutually transfer all thermal and mechanical radial loads between the tubesheets. Additionally, it is understood that the tubes are rigid enough to mutually transfer all mechanical and thermal axial loads between the tubesheets.

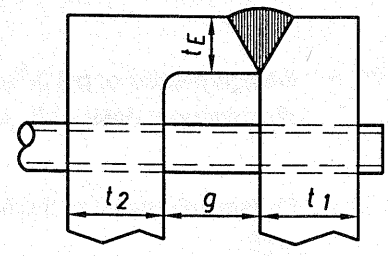

FIGURE RCB-7.154

RCB 7.1541 TUBESHEET THICKNESS

Calculate the total combined tubesheet thickness (T) per Paragraph RCB-7.13.

where

T = Greater of the thickness, inches (mm), resulting from Paragraphs RCB-7.132 or RCB-7.133 using the following variable definitions:

G = Per Paragraph RCB-7.13, inches (mm), using worst case values of shell side or tube side tubesheets at their respective design temperature.

S = Lower of the Code allowable stress, psi (kPa), for either component tubesheet at its respective design temperature.

F = Per Paragraph RCB-7.13, using worst case values of shell side or tube side tubesheets at their respective design temperature.

All other variables are per Paragraph RCB-7.13.

Establish the thickness of each individual tubesheet so that $t_2 + t_1 \geq T$ and the minimum individual tubesheet thicknesses (t_1 and t_2) shall be the greater of Paragraphs RCB-7.13 or RCB.7.134, as applicable.

where

t_1 = Thickness of tube side tubesheet, inches (mm).

t_2 = Thickness of shell side tubesheet, inches (mm).

RCB-7.1542 INTERCONNECTING ELEMENT DESIGN - SHEAR

The radial shear stress (τ), psi (kPa), at attachment due to differential thermal expansion of tubesheets shall not exceed 80% of the lower Code allowable stress (S) of either of the tubesheet materials or the interconnecting element at their respective design temperature. The shear is defined as:

$$\tau = \frac{F_E}{t_E} \leq 0.8S$$

(Metric) $$\tau = \frac{F_E}{t_E} \times 10^6 \leq 0.8S$$

t_E = Thickness of interconnecting element, inches (mm).

where

$$F_E = \left| \frac{(\alpha_1 \Delta T_1 - \alpha_2 \Delta T_2)(t_1 E_1)(t_2 E_2)}{(t_1 E_1) + (t_2 E_2)} \right|$$

(Metric) $$F_E = \left| \frac{(\alpha_1 \Delta T_1 - \alpha_2 \Delta T_2)(t_1 E_1)(t_2 E_2)}{(t_1 E_1) + (t_2 E_2)} \right| \times 10^{-6}$$

where

F_E = Force per unit measure due to differential radial expansion, lbf/in (kN/mm).

E_1 = Modulus of Elasticity of tubesheet 1 at mean metal temperature, psi (kPa).

E_2 = Modulus of Elasticity of tubesheet 2 at mean metal temperature, psi (kPa).

α_1 = Coefficient of thermal expansion for tubesheet 1 at mean metal temperature, inches/inch/ ° F (mm/mm/ ° C).

α_2 = Coefficient of thermal expansion for tubesheet 2 at mean metal temperature, inches/inch/ ° F (mm/mm/ ° C).

ΔT_1 = Difference in temperature from ambient conditions to mean metal temperature for tubesheet 1, ° F (° C).

ΔT_2 = Difference in temperature from ambient conditions to mean metal temperature for tubesheet 2, ° F (° C).

RCB-7.1543 INTERCONNECTING ELEMENT DESIGN - BENDING AND TENSILE

The combined stresses from bending due to differential thermal expansion of tubesheets and axial tension due to thermal expansion of tubes shall not exceed 1.5 times the Code allowable stress (S) of the interconnecting element. The combined total stress of interconnecting element (σ_E), psi (kPa), is given by:

$$\sigma_E = \sigma_B + \sigma_{TE} \leq 1.5S$$

The stress due to axial thermal expansion of tubes (σ_{TE}) , psi (kPa), is defined as:

$$\sigma_{TE} = \left| \frac{F_{TE}}{A_E} \right|$$

(Metric) $$\sigma_{TE} = \left| \frac{F_{TE}}{A_E} \right| \times 10^6$$

where

$$F_{TE} = \frac{(\alpha_T \Delta T_T - \alpha_E \Delta T_E)(E_T A_T)(E_E A_E)}{(E_T A_T) + (E_E A_E)}$$

(Metric) $$F_{TE} = \frac{(\alpha_T \Delta T_T - \alpha_E \Delta T_E)(E_T A_T)(E_E A_E)}{(E_T A_T) + (E_E A_E)} \times 10^{-6}$$

The stress due to bending caused by differential thermal expansion of tubesheets σ_B, psi (kPa), is defined as:

$$\sigma_B = \frac{6 M_B}{t_E{}^2}$$

(Metric) $$\sigma_B = \frac{6 M_B}{t_E{}^2} \times 10^6$$

The bending moment is defined as:

$$M_B = \frac{F_E g}{2}$$

where

M_B = Bending moment per unit measure acting on interconnecting element, inch-pounds per inch (mm-kN/mm).

g = Spacing between tubesheets, inches (mm). The spacing between tubesheets for an integral double tubesheet is left to the discretion of the manufacturer. For other types of double tubesheets, the minimum spacing is determined in accordance with Paragraphs RCB-7.1552 or RCB-7.1562, as applicable.

α_T = Coefficient of thermal expansion of tubes at mean metal temperature, inches/inch/ ° F (mm/mm/ ° C).

α_E = Coefficient of thermal expansion of interconnecting element at mean metal temperature, inches/inch/ ° F (mm/mm/ ° C).

ΔT_T = Difference in temperature from ambient conditions to mean metal temperature for tubes, ° F (° C).

ΔT_E = Difference in temperature from ambient conditions to mean metal temperature for interconnecting element, ° F (° C).

E_T = Modulus of Elasticity of tubes at mean metal temperature, psi (kPa).

E_E = Modulus of Elasticity of interconnecting element at mean metal temperature, psi (kPa).

A_T = Total cross sectional area of tubes between tubesheets, square inches (mm^2).

A_E = Total cross sectional area of interconnecting element, square inches (mm^2).

F_{TE} = Resultant force due to the difference in thermal expansion between tubes and element, lbf (kN).

RCB-7.1544 TUBE STRESS CONSIDERATION - AXIAL STRESS

The axial stresses in the tubes due to thermal expansion and pressure load shall not exceed the Code allowable stress (S) of the tubes at design temperature.

The total combined stress of the tubes (σ_T), psi (kPa), is given by:

$$\sigma_T = \sigma_P + \sigma_{TT} \leq S$$

The axial stress due to pressure (σ_P), psi (kPa), is defined as:

$$\sigma_P = \frac{P\pi(G^2 - N d_o^2)}{4A_T}$$

where

P = Greater of shell side or tube side design pressure, psi (kPa).

G = Per Paragraph RCB-7.13, inches (mm).

N = Number of tubes.

d_o = Tube OD between tubesheets, inches (mm).

The stress due to axial thermal expansion of tubes (σ_{TT}), psi (kPa), is defined by:

$$\sigma_{TT} = \frac{F_{TE}}{A_T}$$

(Metric) $$\sigma_{TT} = \frac{F_{TE}}{A_T} \times 10^6$$

RCB-7.155 CONNECTED DOUBLE TUBESHEETS

The tubesheets are connected in a manner which distributes axial load between tubesheets by means of an interconnecting cylinder. The effect of the differential radial growth between tubesheets is a major factor in tube stresses and spacing between tubesheets. It is assumed the interconnecting cylinder and tubes are rigid enough to mutually transfer all mechanical and thermal axial loads between the tubesheets.

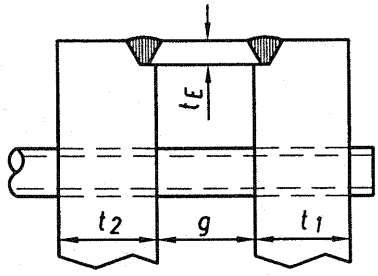

FIGURE RCB-7.155

RCB-7.1551 TUBESHEET THICKNESS

Calculate the total combined tubesheet thickness (T) per Paragraph RCB-7.13.

where

T = Greater of the thickness, inches (mm), resulting from Paragraphs RCB-7.132 or RCB-7.133 using variables as defined in Paragraph RCB-7.1541.

Establish the thickness of each individual tubesheet so that $t_2 + t_1 \geq T$ and the minimum individual tubesheet thickness (t_1 and t_2) shall be the greater of Paragraph RCB-7.13 or RCB-7.134, when applicable.

where

t_1 = Thickness of tube side tubesheet, inches (mm).

t_2 = Thickness of shell side tubesheet, inches (mm).

RCB-7.1552 MINIMUM SPACING BETWEEN TUBESHEETS

The minimum spacing (g), inches (mm), between tubesheets required to avoid overstress of tubes resulting from differential thermal growth of individual tubesheets is given by:

$$g = \sqrt{\frac{d_o \Delta r E_T}{0.27 Y_T}}$$

where

d_o = Tube OD between tubesheets, inches (mm).

Y_T = Yield strength of the tube material at maximum metal temperature, psi (kPa).

Δr = Differential radial expansion between adjacent tubesheets, inches (mm). (Measured from center of tubesheet to D_{TL}).

$$\Delta r = \left| \left(\frac{D_{TL}}{2} \right) (\alpha_2 \Delta T_2 - \alpha_1 \Delta T_1) \right|$$

where

D_{TL} = Outer tube limit, inches (mm).

RCB-7.1553 INTERCONNECTING ELEMENT DESIGN - AXIAL STRESS

The interconnecting element axial stress (σ_{TE}), psi (kPa), due to the thermal expansion of the tubes shall not exceed the Code allowable stress (S) of the interconnecting element at design temperature. The axial stress is defined as:

$$\sigma_{TE} = \frac{F_{TE}}{A_E}$$

(Metric) $$\sigma_{TE} = \frac{F_{TE}}{A_E} \times 10^6$$

where

$$F_{TE} = \frac{(\alpha_T \Delta T_T - \alpha_E \Delta T_E)(E_T A_T)(E_E A_E)}{(E_T A_T) + (E_E A_E)}$$

(Metric) $$F_{TE} = \frac{(\alpha_T \Delta T_T - \alpha_E \Delta T_E)(E_T A_T)(E_E A_E)}{(E_T A_T) + (E_E A_E)} \times 10^{-6}$$

RCB-7.1554 TUBE STRESS CONSIDERATIONS - AXIAL STRESS

The axial stresses in the tubes due to thermal expansion and pressure load shall not exceed the Code allowable stress (S) of the tubes at design temperature.

The total combined stress of tubes (σ_T), psi (kPa), is given by:

$$\sigma_T = \sigma_P + \sigma_{TT} \leq S$$

The axial stress due to pressure (σ_P), psi (kPa), is defined as:

$$\sigma_P = \frac{P\pi(G^2 - N d_o{}^2)}{4A_T}$$

where

P = Greater of shell side or tube side design pressure, psi (kPa).

G = Per Paragraph RCB-7.13, inches (mm).

N = Number of tubes.

d_o = Tube OD between tubesheets, inches (mm).

The stress due to axial thermal expansion of tubes (σ_{TT}), psi (kPa), is determined by:

$$\sigma_{TT} = \frac{F_{TE}}{A_T}$$

(Metric) $$\sigma_{TT} = \frac{F_{TE}}{A_T} \times 10^6$$

RCB-7.156 SEPARATE DOUBLE TUBESHEETS

The tubesheets are connected only by the interconnecting tubes. The effect of differential radial growth between tubesheets is a major factor in tube stresses and spacing between tubesheets. It is assumed that no loads are transferred between the tubesheets.

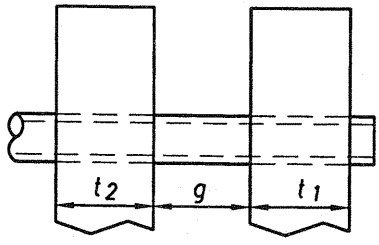

FIGURE RCB-7.156

RCB-7.1561 TUBESHEET THICKNESS

Calculate tube side tubesheet thickness per Paragraph RCB-7.13. Use all variables as defined per TEMA, neglecting all considerations of shell side design conditions.

Calculate shell side tubesheet thickness per Paragraph RCB-7.13. Use all variables as defined per TEMA, neglecting all considerations of tube side design conditions.

RCB-7.1562 MINIMUM SPACING BETWEEN TUBESHEETS

The minimum spacing (g), inches (mm), between tubesheets required to avoid overstress of tubes resulting from differential thermal growth of individual tubesheets is given by:

$$g = \sqrt{\frac{d_o \Delta r E_T}{0.27 Y_T}}$$

RCB-7.16 FIXED TUBESHEET EFFECTIVE PRESSURE

This paragraph shall apply to exchangers having tubesheets fixed to both ends of the shell, with or without a shell expansion joint except as required or permitted by Paragraph RCB-7.3. Both tubesheets of fixed tubesheet exchangers shall have the same thickness, unless the provisions of Paragraph RCB-7.166 are satisfied.

For fixed tubesheet exchangers, the mutually interdependent loads exerted on the tubesheets, tubes, and shell are defined in terms of equivalent and effective design pressures in Paragraphs RCB-7.161 through RCB-7.165 for use in Paragraphs RCB-7.132 and RCB-7.133. These pressures shall also be used (with $J = 1$) in Paragraphs RCB-7.22, RCB-7.23 and RCB-7.25 to assess the need for an expansion joint. The designer shall consider the most adverse operating conditions specified by the purchaser. (See Paragraph E-3.2.)

RCB-7.161 EQUIVALENT DIFFERENTIAL EXPANSION PRESSURE

The pressure due to differential thermal expansion, psi (kPa), is given by:

$$P_d = \frac{4 \; J \; E_s \; t_s \; \left(\frac{\Delta L}{L_t}\right)}{(D_o - 3t_s) \; (1 + JKF_q)}$$

Note: Algebraic sign must be retained for use in Paragraphs RCB-7.163 through RCB-7.166, RCB-7.22 and RCB-7.23.

where

$J = 1.0$ for shells without expansion joints

$$J = \frac{S_j L}{S_j L + \pi (D_o - t_s) t_s E_s}$$ for shells with expansion joints. See Note (1)

S_j = Spring rate of the expansion joint, lbs/inch (kN/mm)

$$K = \frac{E_s \; t_s \; (D_o - t_s)}{E_t \; t_t \; N \; (d_o - t_t)}$$

$$F_q = 0.25 + (F - 0.6)\left[\frac{300 \; t_s \; E_s}{K \; L \; E}\left(\frac{G}{T}\right)^3\right]^{1/4}$$

(Use the calculated value of F_q or 1.0, whichever is greater.)

F and G are as defined in Paragraph RCB-7.132.

T = Tubesheet thickness used, but not less than 98.5% of the greater of the values defined by Paragraph RCB-7.132 or RCB-7.133. (The value assumed in evaluating F_q must match the final computed value within a tolerance of ± 1.5%) See Note (2).

L = Tube length between inner tubesheet faces, inches (mm).

ΔL = Differential thermal growth (shell - tubes), inches (mm) (See Section 7, Paragraph T-4.5).

L_t = Tube length between outer tubesheet faces, inches (mm).

E_s = Elastic modulus of the shell material at mean metal temperature, psi (kPa). (See Paragraph RCB-1.431). See Note (3).

E_t = Elastic modulus of the tube material at mean metal temperature, psi (kPa). (See Paragraph RCB-1.432).

E = Elastic modulus of the tubesheet material at mean metal temperature, psi (kPa). (See Paragraph RCB-1.432).

N = Number of tubes in the shell.

D_o = Outside diameter of the shell or port for kettle type exchangers, inches (mm).

d_o = Outside diameter of the tubes (for integrally finned tubes, d_o is root diameter of fin), inches (mm).

t_t = Tube wall thickness (for integrally finned tubes, t_t is wall thickness under fin), inches (mm).

t_s = Shell wall thickness, inches (mm).

Notes:

(1) J can be assumed equal to zero for shells with expansion joints where

$$S_j < \frac{(D_o - t_s)t_s E_s}{10L}$$

(2) Tubesheets thicker than computed are permissible provided neither shell nor tubes are overloaded. See Paragraph RCB-7.2.

(3) For Kettle type,

$$E_S = \frac{E_{SH} L}{(2L_P) + [(4L_C T_P D_P)/((D_P + D_K)T_C)] + [(L_K T_P D_P)/(D_K T_K)]}$$

where

E_{SH} = Elastic modulus of the shell material at mean metal temperature, psi (kPa). (See Paragraph RCB-1.431).

L = Tube length between inner tubesheet faces, inches (mm).

L_P = Length of kettle port cylinder, inches (mm).

T_P = Kettle port cylinder thickness, inches (mm).

D_P = Mean diameter of kettle port cylinder, inches (mm).

L_K = Length of kettle cylinder, inches (mm).

T_K = Kettle cylinder thickness, inches (mm).

D_K = Mean diameter of kettle cylinder, inches (mm).

L_C = Axial length of kettle cone, inches (mm).

T_C = Kettle cone thickness, inches (mm).

RCB-7.162 EQUIVALENT BOLTING PRESSURE

When fixed tubesheets are extended for bolting to heads with ring type gaskets, the extension and that portion of the tubesheets inside the shell may differ in thickness. The extension shall be designed in accordance with Paragraph RCB-7.134. The effect

of the moment acting upon the tubesheet extension shall be accounted for in subsequent paragraphs in terms of equivalent tube side and shell side bolting pressures which are defined as:

$$P_{Bt} = \frac{6.2 \quad M_1}{F^2 \quad G^3}$$

$$P_{Bs} = \frac{6.2 \quad M_2}{F^2 \quad G^3}$$

where

F and G are defined in Paragraph RCB-7.132.

M_1 = Total moment acting upon the extension under operating conditions, defined by the Code as M_o under flange design, inch-pounds (mm-kN).

M_2 = Total moment acting upon the extension under bolting-up conditions, defined by the Code as M_o under flange design, inch-pounds (mm-kN).

P_{Bt} = Equivalent bolting pressure when tube side pressure is acting, psi (kPa).

P_{Bs} = Equivalent bolting pressure when tube side pressure is not acting, psi (kPa).

RCB-7.163 EFFECTIVE SHELL SIDE DESIGN PRESSURE

The effective shell side design pressure is to be taken as the greatest absolute value of the following:

$$P = \frac{P_s' - P_d}{2}$$

or $P = P_s'$

or $P = P_{Bs}$

or $P = \frac{P_s' - P_d - P_{Bs}}{2}$

or $P = \frac{P_{Bs} + P_d}{2}$

or $P = P_s' - P_{Bs}$

where

$$P_s' = P_s \left[\frac{0.4 \quad J[1.5 + K(1.5 + f_s)] - \left[\left(\frac{1-J}{2} \right) \left(\frac{D_j^2}{G^2} - 1 \right) \right]}{1 + J \quad K \quad F_q} \right]$$

P_s = Shell side design pressure, psi (kPa) (For vacuum design, P_s is negative).

$$f_s = 1 - N\left(\frac{d_o}{G}\right)^2$$

G = Inside diameter of the shell, inches (mm).

D_j = Maximum expansion joint inside diameter, inches (mm) ($D_j = G$ when no expansion joint is present).

Other symbols are as defined under Paragraphs RCB-7.161 and RCB-7.162

Notes:

(1) Algebraic sign of P_s' must be used above, and must be retained for use in Paragraphs RCB-7.164, RCB-7.165, RCB-7.166, RCB-7.22 and RCB-7.23.

(2) When $J = 0$, formulae containing P_d will not control.

(3) Delete the term P_{Bs} in the above formulae for use in Paragraph RCB-7.133.

(4) For kettle type, G = port inside diameter.

RCB-7.164 EFFECTIVE TUBE SIDE DESIGN PRESSURE

The effective tube side design pressure is to be taken as the greatest absolute value of the following:

$$P = \frac{P_t' + P_{Bt} + P_d}{2} \quad \text{or} \quad P = P_t' + P_{Bt} \qquad \text{When } P_s' \text{ is positive}$$

$$P = \frac{P_t' - P_s' + P_{Bt} + P_d}{2} \quad \text{or} \quad P = P_t' - P_s' + P_{Bt} \qquad \text{When } P_s' \text{ is negative}$$

where

$$P_t' = P_t\left[\frac{1 + 0.4JK(1.5 + f_t)}{1 + JKF_q}\right]$$

P_t = Tube side design pressure, psi (kPa) (For vacuum design, P_t is negative).

$$f_t = 1 - N\left[\frac{d_o - 2t_t}{G}\right]^2$$

G = Inside diameter of the shell, inches (mm).

Other symbols are as defined under Paragraphs RCB-7.161, RCB-7.162, and RCB-7.163.

Notes:

(1) Algebraic sign of P_t' must be used above, and must be retained for use in Paragraphs RCB-7.165, RCB-7.166, RCB-7.22 and RCB-7.23.

(2) When $J = 0$:

a) Formulae containing P_d will not control.

b) When P_s and P_t are both positive the following formula is controlling:

$$P = P_t + \frac{P_s}{2}\left[\left(\frac{D_j}{G}\right)^2 - 1\right] + P_{Bt}$$

(3) Delete the term P_{Bt} in the above formulae for use in Paragraph RCB-7.133.

(4) For kettle type, G = port inside diameter.

RCB-7.165 EFFECTIVE DIFFERENTIAL DESIGN PRESSURE

Under certain circumstances the Code and other regulatory bodies permit design on the basis of simultaneous action of both shell and tube side pressures. The effective differential design pressure for fixed tubesheets under such circumstances is to be taken as the greatest absolute value of the following:

$$P = P_t' - P_s' + P_{Bt}$$

or $$P = \frac{P_t' - P_s' + P_{Bt} + P_d}{2}$$

or $$P = P_{Bs}$$

or $$P = \frac{P_{Bs} + P_d}{2}$$

or $$P = P_t' - P_s'$$

or $$P = \frac{P_t' - P_s' + P_d}{2}$$

or $$P = P_{Bt}$$

where

P_d, P_{Bs}, P_{Bt}, P_s' and P_t' are as defined in Paragraphs RCB-7.161, RCB-7.162, RCB-7.163 and RCB-7.164.

Notes:

(1) It is not permissible to use $(P_s - P_t)$ in place of P_s to calculate P_s' in Paragraph RCB-7.163, and it is not permissible to use $(P_t - P_s)$ in place of P_t to calculate P_t' in Paragraph RCB-7.164.

(2) When $J = 0$, the formulae containing P_d will not control.

(3) Delete the terms P_{Bt} and P_{Bs} in the above formulae for use in Paragraph RCB-7.133.

RCB-7.166 FIXED TUBESHEETS OF DIFFERING THICKNESSES

The rules presented in Paragraphs RCB-7.161 through RCB-7.165 and RCB-7.2 are intended for fixed tubesheet exchangers where both tubesheets are the same thickness. Conditions can exist where it is appropriate to use tubesheets of differing thicknesses. These conditions may result from significantly differing elastic moduli and/or allowable stresses. The following procedure may be used for such cases:

(1) Separate the design parameters as defined in previous paragraphs for each tubesheet system by assigning subscripts A and B to each of the following terms:
T as T_A and T_B

L as L_A and L_B where $L_A + L_B = 2L$

E as E_A and E_B

F_q as F_{qA} and F_{qB}

Note: The values of M_1, M_2, F, G, ΔL, L_t, D_o, t_s, d_o, $t_t E_s$, E_t, N and S_j must remain constant throughout this analysis. If a fixed tubesheet exchanger has different bolting moments at each tubesheet, the designer should use the values of M_1 and M_2 that produce the conservative design.

(2) Calculate T_A per Paragraphs RCB-7.161 through RCB-7.165 assuming that both tubesheets have the properties of subscript A and $L_A = L$.

(3) Calculate T_B per Paragraphs RCB-7.161 through RCB-7.165 assuming that both tubesheets have the properties of subscript B and $L_B = L$.

(4) Calculate L_A and L_B as follows:

$$L = L_t - T_A - T_B$$

$$L_B = \frac{2L}{\left[1 + \left(\frac{E_B}{E_A}\right)\left(\frac{T_B}{T_A}\right)^3\right]}$$

$$L_A = 2L - L_B$$

(5) Recalculate T_A per Paragraphs RCB-7.161 through RCB-7.165 using the properties of subscript A and L_A from step 4.

(6) Recalculate T_B per Paragraphs RCB-7.161 through RCB-7.165 using the properties of subscript B and L_B from step 4.

(7) Repeat steps 4 through 6 until values assumed in step 4 are within 1.5% of the values calculated in step 5 for T_A and step 6 for T_B.

(8) Round T_A and T_B up to an appropriate increment and recalculate L_A and L_B per step 4.

(9) Calculate the shell and tube stresses and the tube-to-tubesheet joint loads per Paragraph RCB-7.2 for each tubesheet system using the appropriate subscripted properties.

Note: The shell and tube stresses and tube-to-tubesheet joint loads for each tubesheet system should theoretically be identical. Small differences may exist, however, because of rounding the calculated tubesheet thicknesses in step 8. The tube stress and the tube-to-tubesheet joint loads from the two systems should be averaged before comparing these values to the allowable values as calculated in Paragraph RCB-7.2.

* RCB-7.2 SHELL AND TUBE LONGITUDINAL STRESSES - FIXED TUBESHEET EXCHANGERS

Shell and tube longitudinal stresses, which depend upon the equivalent and effective pressures determined by Paragraphs RCB-7.161 through RCB-7.164, shall be calculated for fixed tubesheet exchangers with or without shell expansion joints by using the following paragraphs. The designer shall consider the most adverse operating conditions specified by the purchaser. (See Paragraph E-3.2.)

Note: The formulae and design criteria presented in Paragraphs RCB-7.23 through RCB-7.25 consider only the tubes at the periphery of the bundle, which are normally the most highly stressed tubes. Additional consideration of the tube stress distribution throughout the bundle may be of interest to the designer under certain conditions of loading and/or geometry. See the "Recommended Good Practice" section of these Standards for additional information.

RCB-7.21 HYDROSTATIC TEST

Hydrostatic test conditions can impose excessive shell and/or tube stresses. These stresses can be calculated by substituting the pressures and temperatures at hydrostatic test for the appropriate design pressures and metal temperatures in the paragraphs that follow and in Paragraphs RCB-7.161 through RCB-7.164 where applicable.

RCB-7.22 SHELL LONGITUDINAL STRESS

The effective longitudinal shell stress is given by:

$$S_s = \frac{C_s(D_o - t_s)P_s^*}{4t_s}$$

where

$C_s = 1.0$ except as noted below

$P_s^* = P_1$ Note (2)

or $P_s^* = P_s'$ Note (2)

or $P_s^* = -P_d$ Note (1)

or $P_s^* = P_1 + P_s'$

or $P_s^* = P_1 - P_d$ Notes (1) and (2)

or $P_s^* = P_s' - P_d$ Notes (1) and (2)

or $P_s^* = P_1 + P_s' - P_d$ Note (1)

where

$$P_1 = P_t - P_t'$$

Other symbols are as defined in Paragraphs RCB-7.161, RCB-7.163 and RCB-7.164, using actual shell and tubesheet thicknesses and retaining algebraic signs.

Notes:

(1) If the algebraic sign of P_s^* is positive, $C_s = 0.5$.

(2) This formula is not applicable for differential pressure design per Paragraph RCB-7.165.

A condition of overstress shall be presumed to exist when the largest absolute value of S_s exceeds the Code allowable stress in tension for the shell material at design temperature, or 90% of yield stress at hydrostatic test, or when the greatest negative value of S_s exceeds the Code allowable stress in compression at design temperature.

RCB-7.23 TUBE LONGITUDINAL STRESS - PERIPHERY OF BUNDLE

The maximum effective longitudinal tube stress, psi (kPa), at the periphery of the bundle is given by:

$$S_t = \frac{C_t \ F_q \ P_t^* \ G^2}{4 \ N \ t_t(d_o - t_t)}$$

where

$C_t = 1.0$ except as noted below

$P_t^* = P_2$ Note (2)

or $P_t^* = -P_3$ Note (2)

or $P_t^* = P_d$ Notes (1) and (2)

or $P_t^* = P_2 - P_3$

or $P_t^* = P_2 + P_d$ Notes (1) and (2)

or $P_t^* = -P_3 + P_d$ Notes (1) and (2)

or $P_t^* = P_2 - P_3 + P_d$ Note (1)

where

$$P_2 = P_t' - \left(\frac{f_t P_t}{F_q}\right)$$

$$P_3 = P_s' - \left(\frac{f_s P_s}{F_q}\right)$$

Other symbols are as defined in Paragraphs RCB-7.161, RCB-7.163 and RCB-7.164, using actual shell and tubesheet thicknesses and retaining algebraic signs.

Notes:

(1) If the algebraic sign of P_t* is positive, $C_t = 0.5$.

(2) This formula is not applicable for differential pressure design per Paragraph RCB-7.165.

A condition of overstress shall be presumed to exist when the largest positive value of S_t exceeds the Code allowable stress in tension for the tube material at design temperature, or 90% of yield stress at hydrostatic test, or when the greatest negative value of S_t exceeds the allowable compressive stress as determined in accordance with Paragraph RCB-7.24.

RCB-7.24 ALLOWABLE TUBE COMPRESSIVE STRESS - PERIPHERY OF BUNDLE

The allowable tube compressive stress, psi (kPa), for the tubes at the periphery of the bundle is given by:

$$S_c = \frac{\pi^2 \ E_t}{F_s \ \left(\frac{kl}{r}\right)^2} \qquad \text{when} \quad C_c \le \frac{kl}{r}$$

or

$$S_C = \frac{S_y}{F_s}\left[1 - \frac{\left(\frac{kl}{r}\right)}{2 \ C_c}\right] \qquad \text{when} \quad C_c > \frac{kl}{r}$$

where

$$C_c = \sqrt{\frac{2\pi^2 E_t}{S_y}}$$

S_y = Yield stress, psi (kPa), of the tube material at the design metal temperature. (See Paragraph RCB-1.42).

r = Radius of gyration of the tube, inches (mm), given by:

$r = 0.25\sqrt{d_o{}^2 + (d_o - 2t_t)^2}$ (See Table D-7).

kl = Equivalent unsupported buckling length of the tube, inches (mm). The largest value considering unsupported tube spans shall be used.

l = Unsupported tube span, inches (mm).

k =
- 0.6 for unsupported spans between two tubesheets
- 0.8 for unsupported spans between a tubesheet and a tube support
- 1.0 for unsupported spans between two tube supports

F_s = Factor of safety given by:

$F_s = 3.25 - 0.5F_q$

Note: F_s shall not be less than 1.25 and need not be taken greater than 2.0.

Other symbols are as defined in Paragraph RCB-7.161.

Note: The allowable tube compressive stress shall be limited to the smaller of the Code allowable stress in tension for the tube material at the design metal temperature (see Paragraph RCB-1.42) or the calculated value of S_c.

RCB-7.25 TUBE-TO-TUBESHEET JOINT LOADS - PERIPHERY OF BUNDLE

The maximum effective tube-to-tubesheet joint load, lbs. (kN), at the periphery of the bundle is given by:

$$W_j = \frac{\pi \ F_q \ P_t{}^* \ G^2}{4 \ N}$$

where

$P_t^* = P_2$ Note (1)

or $P_t^* = -P_3$ Note (1)

or $P_t^* = P_2 - P_3$

P_2 and P_3 are as defined in Paragraph RCB-7.23. Other symbols are as defined in Paragraphs RCB-7.161, RCB-7.163 and RCB-7.164, using the actual shell and tubesheet thicknesses.

Note: (1) This formula is not applicable for differential pressure design per Paragraph RCB-7.165.

The allowable tube-to-tubesheet joint loads as calculated by the Code or other means may be used as a guide in evaluating W_j.

The tube-to-tubesheet joint loads calculated above consider only the effects of pressure loadings. The tube-to-tubesheet joint loads caused by restrained differential thermal expansion between shell and tubes are considered to be within acceptable limits if the requirements of Paragraph RCB-7.23 are met.

RCB-7.3 SPECIAL CASES

Special consideration must be given to tubesheet designs with abnormal conditions of support or loading. Following are some typical examples:

(1) Tubesheets with portions not adequately stayed by tubes, or with wide untubed rims.

(2) Exchangers with large differences in shell and head inside diameters; e.g. fixed tubesheets with kettle type shell.

(3) The adequacy of the staying action of the tubes during hydrostatic test; e.g., with test rings for types S and T, or types P and W.

(4) Vertical exchangers where weight and/or pressure drop loadings produce significant effects relative to the design pressures.

(5) Extreme interpass temperature differentials.

Consideration may also be given to special design configurations and/or methods of analysis which may justify reduction of the tubesheet thickness requirements.

RCB-7.4 TUBE HOLES IN TUBESHEETS

RCB-7.41 TUBE HOLE DIAMETERS AND TOLERANCES

Tube holes in tubesheets shall be finished to the diameters and tolerances shown in Tables RCB-7.41 and RCB-7.41M, column (a). To minimize work hardening, a closer fit between tube OD and tube ID as shown in column (b) may be provided when specified by the purchaser.

RCB-7.42 TUBESHEET LIGAMENTS

Tables RCB-7.42 and RCB-7.42M give permissible tubesheet ligaments, drill drift and recommended maximum tube wall thicknesses.

*RCB-7.43 TUBE HOLE FINISH

The inside edges of tube holes in tubesheets shall be free of burrs to prevent cutting of the tubes. Internal surfaces shall be given a workmanlike finish.

TABLE RCB-7.41
TUBE HOLE DIAMETERS AND TOLERANCES
(All Dimensions in Inches)

Nominal Tube OD	Nominal Tube Hole Diameter and Under Tolerance				Over Tolerance: 96% of tube holes must meet value in column (c). Remainder may not exceed value in column (d)	
	Standard Fit (a)		Special Close Fit (b)			
	Nominal Diameter	Under Tolerance	Nominal Diameter	Under Tolerance	(c)	(d)
1/4	0.259	0.004	0.257	0.002	0.002	0.007
3/8	0.384	0.004	0.382	0.002	0.002	0.007
1/2	0.510	0.004	0.508	0.002	0.002	0.008
5/8	0.635	0.004	0.633	0.002	0.002	0.010
3/4	0.760	0.004	0.758	0.002	0.002	0.010
7/8	0.885	0.004	0.883	0.002	0.002	0.010
1	1.012	0.004	1.010	0.002	0.002	0.010
1-1/4	1.264	0.006	1.261	0.003	0.003	0.010
1-1/2	1.518	0.007	1.514	0.003	0.003	0.010
2	2.022	0.007	2.018	0.003	0.003	0.010

TABLE RCB-7.41 M
TUBE HOLE DIAMETERS AND TOLERANCES
(All Dimensions in mm)

Nominal Tube OD	Nominal Tube Hole Diameter and Under Tolerance				Over Tolerance: 96% of tube holes must meet value in column (c). Remainder may not exceed value in column (d)	
	Standard Fit (a)		Special Close Fit (b)			
	Nominal Diameter	Under Tolerance	Nominal Diameter	Under Tolerance	(c)	(d)
6.4	6.58	0.10	6.53	0.05	0.05	0.18
9.5	9.75	0.10	9.70	0.05	0.05	0.18
12.7	12.95	0.10	12.90	0.05	0.05	0.20
15.9	16.13	0.10	16.08	0.05	0.05	0.25
19.1	19.30	0.10	19.25	0.05	0.05	0.25
22.2	22.48	0.10	22.43	0.05	0.05	0.25
25.4	25.70	0.10	25.65	0.05	0.05	0.25
31.8	32.11	0.15	32.03	0.08	0.08	0.25
38.1	38.56	0.18	38.46	0.08	0.08	0.25
50.8	51.36	0.18	51.26	0.08	0.08	0.25

RB-7.44 TUBE HOLE GROOVING

Tube holes for expanded joints for tubes 5/8" (15.9mm) OD and larger shall be machined with at least two grooves, for additional longitudinal load resistance, each approximately 1/8" (3.2mm) wide by 1/64" (0.4mm) deep. When integrally clad or applied tubesheets facings are used, all grooves should be in the base material unless otherwise specified by the purchaser. Strength welded tubes do not require grooves. Tubesheets with thicknesses less than 1" (25.4mm) may be provided with one groove. When utilizing hydraulic expansion, grooves shall be 1/4" (6.4mm) wide.

C-7.44 TUBE HOLE GROOVING

For design pressures over 300 psi (2068 kPa) and/or temperatures in excess of 350 ° F (177 ° C), the tube holes for expanded joints for tubes 5/8" (15.9 mm) OD and larger shall be machined with at least two grooves, for additional longitudinal load resistance, each approximately 1/8" (3mm) wide by 1/64" (0.4 mm) deep. When integrally clad or applied tubesheet facings are used, all grooves should be in the base material unless otherwise specified by the purchaser. Strength welded tubes do not require grooves. Tubesheets with thicknesses less than 1" (25.4mm) may be provided with one groove. When utilizing hydraulic expansion, grooves shall be 1/4" (6.4mm) wide.

TABLE RCB-7.42

TABLE OF TUBESHEET LIGAMENTS AND RECOMMENDED HEAVIEST TUBE GAGES

(All Dimensions in Inches)

Tube Dia. d_o	Tube Pitch p	$\frac{p}{d_o}$	$p - d_o$	Heaviest Recommended Tube Gage BWG	Tube Hole Dia. Std. Fit	Nominal Ligament Width	Minimum Std. Ligaments (96% of ligaments must equal or exceed values tabulated below) Tubesheet Thickness 1	1-1/2	2	2-1/2	3	4	5	6	Minimum Permissible Ligament Width
1/4	5/16	1.25	1/16	22	0.259	0.054	0.025	0.025	0.025	0.025	--	--	--	--	0.025
	3/8	1.50	1/8	20		0.116	0.083	0.077	0.070	0.064	--	--	--	--	0.060
3/8	1/2	1.33	1/8	18	0.384	0.116	0.087	0.083	0.079	0.075	0.070	0.062	--	--	0.060
	17/32	1.42	5/32	18		0.147	0.119	0.114	0.110	0.106	0.102	0.093	0.085	0.076	0.075
1/2	5/8	1.25	1/8	18	0.510	0.115	0.089	0.085	0.082	0.079	0.076	0.069	0.063	--	0.060
	21/32	1.31	5/32	16		0.146	0.120	0.117	0.113	0.110	0.107	0.101	0.094	0.088	0.075
	11/16	1.38	3/16	16		0.178	0.151	0.148	0.145	0.142	0.138	0.132	0.126	0.119	0.090
5/8	25/32	1.25	5/32	15	0.635	0.146	0.111	0.109	0.106	0.103	0.101	0.096	0.091	0.086	0.075
	13/16	1.30	3/16	14		0.178	0.142	0.140	0.137	0.135	0.132	0.127	0.122	0.117	0.090
	7/8	1.40	1/4	14		0.240	0.205	0.202	0.200	0.197	0.195	0.189	0.184	0.179	0.120
3/4	15/16	1.25	3/16	13	0.760	0.178	0.143	0.141	0.139	0.137	0.135	0.130	0.126	0.122	0.090
	1	1.33	1/4	12		0.240	0.206	0.204	0.201	0.199	0.197	0.193	0.189	0.184	0.120
	1-1/16	1.42	5/16	12		0.303	0.268	0.266	0.264	0.262	0.260	0.255	0.251	0.247	0.150
	1-1/8	1.50	3/8	12		0.365	0.331	0.329	0.326	0.324	0.322	0.318	0.314	0.309	0.185
7/8	1-3/32	1.25	7/32	12	0.885	0.209	0.175	0.173	0.171	0.170	0.168	0.164	0.160	0.157	0.105
	1-1/8	1.29	1/4	12		0.240	0.206	0.205	0.203	0.201	0.199	0.195	0.192	0.188	0.120
	1-3/16	1.36	5/16	10		0.303	0.269	0.267	0.265	0.263	0.262	0.258	0.254	0.251	0.150
	1-1/4	1.43	3/8	10		0.365	0.331	0.330	0.328	0.326	0.324	0.320	0.317	0.313	0.185
1	1-1/4	1.25	1/4	10	1.012	0.238	0.205	0.203	0.202	0.200	0.198	0.195	0.192	0.189	0.120
	1-5/16	1.31	5/16	9		0.301	0.267	0.266	0.264	0.263	0.261	0.258	0.255	0.251	0.150
	1-3/8	1.38	3/8	9		0.363	0.330	0.328	0.327	0.325	0.323	0.320	0.317	0.314	0.185
1 1/4	1-9/16	1.25	5/16	9	1.264	0.299	0.266	0.265	0.263	0.262	0.261	0.258	0.256	0.253	0.150
1 1/2	1-7/8	1.25	3/8	8	1.518	0.357	0.325	0.324	0.323	0.322	0.321	0.318	0.316	0.314	0.180
2	2-1/2	1.25	1/2	6	2.022	0.478	--	0.446	0.445	0.444	0.443	0.442	0.440	0.438	0.250

Notes: The above table of minimum standard ligaments is based on a ligament tolerance not exceeding the sum of twice the drill drift tolerance plus 0.020" for tubes less than 5/8" OD and 0.030" for tube holes 5/8" OD and larger.
Drill drift tolerance = 0.0016 (thickness of tubesheet in tube diameters), inches

*RCB-7.5 TUBE-TO-TUBESHEET JOINTS

RCB-7.51 EXPANDED TUBE-TO-TUBESHEET JOINTS

Expanded tube-to-tubesheet joints are standard.

RB-7.511 LENGTH OF EXPANSION

Tubes shall be expanded into the tubesheet for a length no less than 2" (50.8 mm) or the tubesheet thickness minus 1/8" (3.2 mm), whichever is smaller. In no case shall the expanded portion extend beyond the shell side face of the tubesheet. When specified by the purchaser, tubes may be expanded for the full thickness of the tubesheet.

C-7.511 LENGTH OF EXPANSION

Tubes shall be expanded into the tubesheet for a length no less than two tube diameters, 2" (50.8 mm), or the tubesheet thickness minus 1/8" (3.2 mm), whichever is smaller. In no case shall the expanded portion extend beyond the shell side face of the tubesheet. When specified by the purchaser, tubes may be expanded for the full thickness of the tubesheet.

TABLE RCB-7.42 M

TABLE OF TUBESHEET LIGAMENTS AND RECOMMENDED HEAVIEST TUBE GAGES

(All Dimensions in mm)

Tube Dia. d_o	Tube Pitch p	$\frac{p}{d_o}$	$p - d_o$	Heaviest Recommended Tube Gage BWG	Tube Hole Dia. Std. Fit	Nominal Ligament Width	Minimum Std. Ligaments (96% of ligaments must equal or exceed values tabulated below) Tubesheet Thickness 25.4	38.1	50.8	63.5	76.2	101.6	127.0	152.4	Minimum Permissible Ligament Width
6.4	7.94	1.25	1.59	22	6.579	1.361	0.635	0.635	0.635	0.635	-	-	-	-	0.635
	9.53	1.50	3.18	20		2.951	2.108	1.956	1.778	1.626	-	-	-	-	1.524
9.5	12.70	1.33	3.17	18	9.754	2.946	2.210	2.108	2.007	1.905	1.778	1.575	-	-	1.524
	13.49	1.42	3.96	18		3.736	3.023	2.896	2.794	2.692	2.591	2.362	2.159	1.930	1.905
12.7	15.88	1.25	3.18	18	12.954	2.926	2.261	2.159	2.083	2.007	1.930	1.753	1.600	-	1.524
	16.67	1.31	3.97	16		3.716	3.048	2.972	2.870	2.794	2.718	2.565	2.388	2.235	1.905
	17.46	1.37	4.76	16		4.506	3.835	3.759	3.683	3.607	3.505	3.353	3.200	3.023	2.286
15.9	19.84	1.25	3.96	15	16.129	3.711	2.819	2.769	2.692	2.616	2.565	2.438	2.311	2.184	1.905
	20.64	1.30	4.76	14		4.511	3.607	3.556	3.480	3.429	3.353	3.226	3.099	2.972	2.286
	22.23	1.40	6.35	14		6.101	5.207	5.131	5.080	5.004	4.953	4.801	4.674	4.547	3.048
19.1	23.81	1.25	4.76	13	19.304	4.506	3.632	3.581	3.531	3.480	3.429	3.302	3.200	3.099	2.286
	25.40	1.33	6.35	12		6.096	5.232	5.182	5.105	5.055	5.004	4.902	4.801	4.674	3.048
	26.99	1.42	7.94	12		7.686	6.807	6.756	6.706	6.655	6.604	6.477	6.375	6.274	3.810
	28.58	1.50	9.53	12		9.276	8.407	8.357	8.280	8.230	8.179	8.077	7.976	7.849	4.699
22.2	27.78	1.25	5.55	12	22.479	5.301	4.445	4.394	4.343	4.318	4.267	4.166	4.064	3.988	2.667
	28.58	1.29	6.35	12		6.101	5.232	5.207	5.156	5.105	5.055	4.953	4.877	4.775	3.048
	30.16	1.36	7.93	10		7.681	6.833	6.782	6.731	6.680	6.655	6.553	6.452	6.375	3.810
	31.75	1.43	9.52	10		9.271	8.407	8.382	8.331	8.280	8.230	8.128	8.052	7.950	4.699
25.4	31.75	1.25	6.35	10	25.705	6.045	5.207	5.156	5.131	5.080	5.029	4.953	4.877	4.801	3.048
	33.34	1.31	7.94	9		7.635	6.782	6.756	6.706	6.680	6.629	6.553	6.477	6.375	3.810
	34.93	1.38	9.53	9		9.225	8.382	8.331	8.306	8.255	8.204	8.128	8.052	7.976	4.699
31.8	39.69	1.25	7.94	9	32.106	7.584	6.756	6.731	6.680	6.655	6.629	6.553	6.502	6.426	3.810
38.1	47.63	1.25	9.53	8	38.557	9.073	8.255	8.230	8.204	8.179	8.153	8.077	8.026	7.976	4.572
50.8	63.50	1.25	12.70	6	51.359	12.141	-	11.328	11.303	11.278	11.252	11.227	11.176	11.125	6.350

Notes: The above table of minimum standard ligaments is based on a ligament tolerance not exceeding the sum of twice the drill drift tolerance plus 0.51mm for tubes less than 15.9mm OD and 0.76mm for tube holes 15.9mm OD and larger.
Drill drift tolerance = 0.041 (thickness of tubesheet in tube diameters), mm.

RCB-7.512 CONTOUR OF THE EXPANDED TUBE

The expanding procedure shall be such as to provide substantially uniform expansion throughout the expanded portion of the tube, without a sharp transition to the unexpanded portion.

RB-7.513 TUBE PROJECTION

Tubes shall be flush with or extend by no more than one half of a tube diameter beyond the face of each tubesheet, except that tubes shall be flush with the top tubesheet in vertical exchangers to facilitate drainage unless otherwise specified by the purchaser.

RCB-7.52 WELDED TUBE-TO-TUBESHEET JOINTS

When both tubes and tubesheets, or tubesheet facing, are of suitable materials, the tube joints may be welded.

RCB-7.521 SEAL WELDED JOINTS

When welded tube joints are used for additional leak tightness only, and tube loads are carried by the expanded joint, the tube joints shall be subject to the rules of Paragraphs RCB-7.4 through RCB-7.51.

RCB-7.522 STRENGTH WELDED JOINTS

When welded tube joints are used to carry the longitudinal tube loads, consideration may be given to modification of the requirements of Paragraphs RCB-7.4 through RCB-7.51. Minimum tubesheet thicknesses shown in Paragraphs R-7.131, C-7.131 and B-7.131 do not apply.

RCB-7.523 FABRICATION AND TESTING PROCEDURES

Welding procedures and testing techniques for either seal welded or strength welded tube joints shall be by agreement between the manufacturer and the purchaser.

RCB-7.53 EXPLOSIVE BONDED TUBE-TO-TUBESHEET JOINTS

Explosive bonding and/or explosive expanding may be used to attach tubes to the tubesheets where appropriate. Consideration should be given to modifying the relevant parameters (e.g., tube-to-tubesheet hole clearances and ligament widths) to obtain an effective joint.

R-7.6 TUBESHEET PASS PARTITION GROOVES

Tubesheets shall be provided with approximately 3/16" (4.8 mm) deep grooves for pass partition gaskets.

CB-7.6 TUBESHEET PASS PARTITION GROOVES

For design pressures over 300 psi (2068 kPa), tubesheets shall be provided with pass partition grooves approximately 3/16" (4.8 mm) deep, or other suitable means for retaining the gaskets in place.

RCB-7.7 TUBESHEET PULLING EYES

In exchangers with removable tube bundles having a nominal diameter exceeding 12" (305 mm) and/or a tube length exceeding 96" (2438 mm), the stationary tubesheet shall be provided with two tapped holes in its face for pulling eyes. These holes shall be protected in service by plugs of compatible material. Provision for means of pulling may have to be modified or waived for special construction, such as clad tubesheets or manufacturer's standard, by agreement between the manufacturer and the purchaser.

RB-7.8 CLAD AND FACED TUBESHEETS

The nominal cladding thickness at the tube side face of a tubesheet shall not be less than 5/16" (7.8 mm) when tubes are expanded only, and 1/8" (3.2 mm) when tubes are welded to the tubesheet. The nominal cladding thickness on the shell side face shall not be less than 3/8" (9.5 mm). Clad surfaces, other than in the area into which tubes are expanded, shall have at least 1/8" (3.2 mm) nominal thickness of cladding.

C-7.8 CLAD AND FACED TUBESHEETS

The nominal cladding thickness at the tube side face of a tubesheet shall not be less than 3/16" (4.8 mm) when tubes are expanded only, and 1/8" (3.2 mm) when tubes are welded to the tubesheet. The nominal cladding thickness on the shell side face shall not be less than 3/8" (9.5 mm). Clad surfaces, other than in the area into which tubes are expanded, shall have at least 1/8" (3.2 mm) nominal thickness of cladding.

RCB-8 FLEXIBLE SHELL ELEMENTS

This paragraph shall apply to fixed tubesheet exchangers which require flexible elements to reduce shell and tube longitudinal stresses and/or tube-to-tubesheet joint loads. Light gauge bellows type expansion joints within the scope of the Standards of the Expansion Joint Manufacturers Association (EJMA) are not included within the purview of this paragraph. The analysis contained within these paragraphs is based upon the equivalent geometry used in "Expansion Joints for Heat Exchangers" by S. Kopp and M. F. Sayer; however, the formulae have been derived based upon the use of plate and shell theory modified to account for the stiffness of the knuckle radii, when used. Flanged-only and flanged-and-flued types of expansion joints are examples of flexible shell element combinations. The designer shall consider the most adverse operating conditions specified by the purchaser. (See Paragraph E-3.2.)

RCB-8.1 APPLICATION INSTRUCTIONS AND LIMITATIONS

The formulae contained in the following paragraphs are applicable based upon the following assumptions:

Applied loadings are axial.

Torsional loads are negligible.

The flexible elements are sufficiently thick to avoid instability.

The flexible elements are axisymmetric.

All dimensions are in inches (mm) and all forces are in pounds (kN).

Poisson's ratio is 0.3.

RCB-8.11 CALCULATION SEQUENCE

The sequence of calculation shall be as follows:

(1) Select a geometry for the flexible element per Paragraph RCB-8.21.

(2) Determine the effective geometry constants per Paragraph RCB-8.22.

(3) Calculate the element flexibility factors per Paragraph RCB-8.3.

(4) Calculate the element geometry factors per Paragraph RCB-8.4.

(5) Calculate the stiffness multiplier per Paragraph RCB-8.5

(6) Calculate the equivalent flexible element stiffness per Paragraph RCB-8.6.

(7) Calculate the induced axial force per Paragraph RCB-8.7 for each condition as shown in Table RCB-8.7.

(8) Calculate the flexible element moments and stresses per Paragraph RCB-8.8.

(9) Compare the flexible element stresses to the appropriate allowable stresses per the Code, for the load conditions as noted in step 7.

(10) Repeat steps 1 through 9 as necessary.

RCB-8.12 CORROSION ALLOWANCE

The shell flexible elements shall be analyzed in both the corroded and uncorroded conditions.

RCB-8.13 HYDROSTATIC TEST CONDITIONS

The shell flexible elements shall be evaluated for the hydrostatic test conditions.

RCB-8.2 GEOMETRY DEFINITION

The geometry may be made up of any combination of cylinders and annular plates with or without knuckle radii at their junctions.

RCB-8.21 PHYSICAL GEOMETRY CONSTANTS

Figure RCB-8.21 defines the nomenclature used in the following paragraphs based upon nominal dimensions of the flexible elements.

FIGURE RCB-8.21

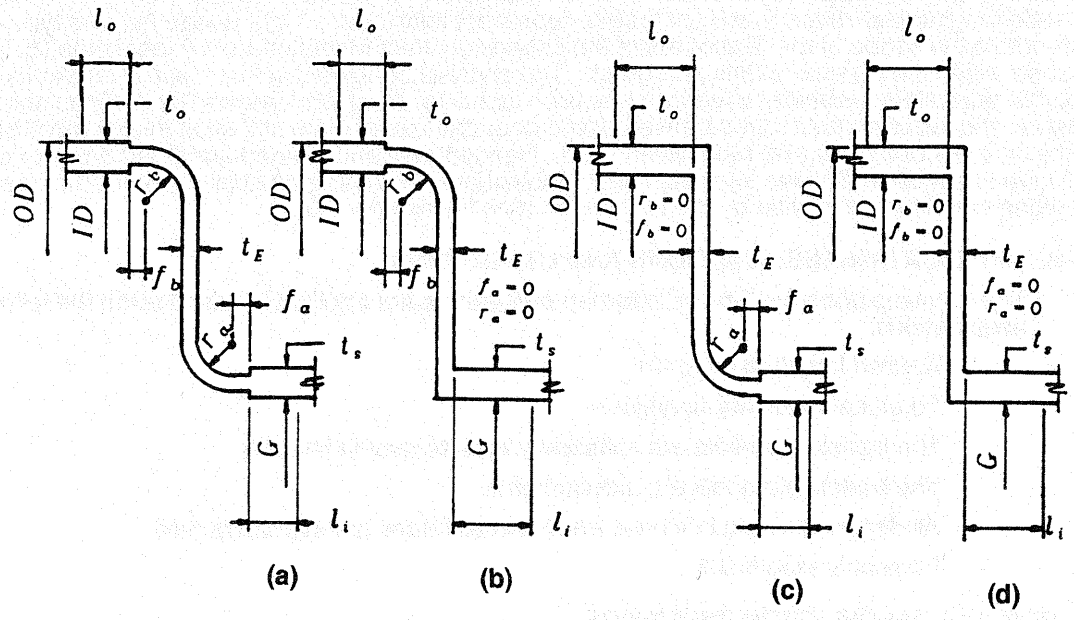

where

l_o and l_i are the lengths of the cylinders welded to single flexible shell elements. When two flexible shell elements are joined with a cylinder, the applicable cylinder length, l_o or l_i used for calculation with the FSE shall be half the actual cylinder length. The applicable cylinder length, l_o and l_i shall be 0 when a cylinder is not attached.

NOTE: All dimensions shown in Figure RCB-8.21 are in inches (mm).

RCB-8.22 EFFECTIVE GEOMETRY CONSTANTS

Figure RCB-8.22 defines the nomenclature used in the following paragraphs based upon the equivalent flexible element model.

FIGURE RCB-8.22

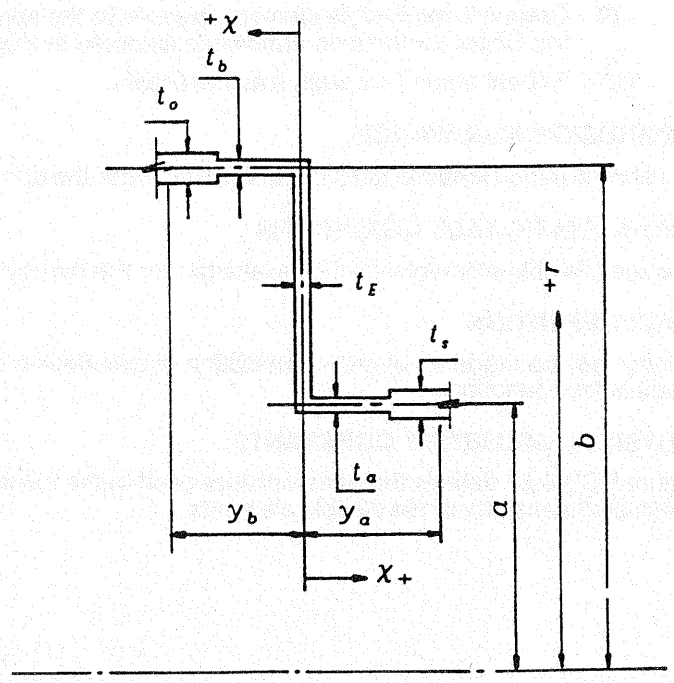

where

$t_a =$ t_E if the flexible element has a knuckle radius at the inside junction, inches (mm)
t_s if the flexible element does not have a knuckle radius at the inside junction, inches (mm)

$t_b =$ t_E if the flexible element has a knuckle radius at the outside junction, inches (mm)
t_o if the flexible element does not have a knuckle radius at the outside junction, inches (mm)

$$a = \frac{G + t_a}{2} \quad \text{, inches (mm)}$$

$$b = \frac{OD - t_b}{2} \quad \text{, inches (mm)}$$

$$h = b - a \quad \text{, inches (mm)}$$

$$l_a = f_a + r_a + \frac{t_E}{2} \quad \text{, inches (mm)}$$

$$l_b = f_b + r_b + \frac{t_E}{2} \quad \text{, inches (mm)}$$

$r'_a = r_a + 0.5t_E$, inches (mm)
$r'_b = r_b + 0.5t_E$, inches (mm)
K = Stiffener multiplier (See Paragraph RCB 8.5)

$y_a = l_a + l_i$, inches (mm) Note: Cylindrical sections beyond the limit, $y_a = 2\sqrt{at_a}$, need only meet the Code requirements for cylinders.

$y_b = l_b + l_o$, inches (mm) Note: Cylindrical sections beyond the limit, $y_b = 2\sqrt{bt_b}$, need only meet the Code requirements for cylinders.

$G, OD, t_E, r_a, r_b, f_a, f_b, l_i$ and l_o are indicated in Figure RCB-8.21.

RCB-8.3 ELEMENT FLEXIBILITY FACTORS

The effective flexibility factors are given by:

$$\beta_a = \frac{1.285}{\sqrt{at_a}} \quad \text{radians/inch (radians/mm)}$$

$$\beta_b = \frac{1.285}{\sqrt{bt_b}} \quad \text{radians/inch (radians/mm)}$$

$D_a = 0.0916E_a t_a{}^3$, inch-pounds

Metric, $D_a = 0.0916E_a t_a{}^3 x 10^{-6}$, mm-kN

$D_b = 0.0916E_b t_b{}^3$, inch-pounds

Metric, $D_b = 0.0916E_b t_b{}^3 x 10^{-6}$, mm-kN

$D_E = 0.0916 E_E t_E^{\ 3}$, inch-pounds

Metric, $D_E = 0.0916 E_E t_E^{\ 3} x 10^{-6}$, mm-kN

$\Omega_a = \beta_a y_a$ for the inner cylinder, radians

$\Omega_b = \beta_b y_b$ for the outer cylinder, radians

$$j_1 = \sin\Omega \sinh\Omega$$

$$j_2 = \cos\Omega \cosh\Omega$$

$$z = j_1^{\ 2} + j_2^{\ 2}$$

$$k_o = \sinh\Omega + \sin\Omega$$

$$k_1 = \frac{\cosh\Omega + \cos\Omega}{k_o}$$

$$k_2 = \frac{\sinh\Omega - \sin\Omega}{k_o}$$

$$k_3 = \frac{\cosh\Omega - \cos\Omega}{k_o}$$

These values must be calculated for Ω_a at the inner cylinder as well as Ω_b at the outer cylinder.

where

E_s = Modulus of elasticity of the inner cylinder, psi (kPa)

E_o = Modulus of elasticity of the outer cylinder, psi (kPa)

E_E = Modulus of elasticity of the flexible shell element, psi (kPa)

E_a = E_E if the flexible element has a knuckle radius at the inside junction, psi (kPa)
E_s if the flexible element does not have a knuckle radius at the inside junction, psi (kPa)

E_b = E_E if the flexible element has a knuckle radius at the outside junction, psi (kPa)
E_o if the flexible element does not have a knuckle radius at the outside junction, psi (kPa)

a, b, t_a, t_b, t_E, y_a and y_b are defined in Paragraph RCB-8.22.

RCB-8.31 CYLINDER-TO-CYLINDER FLEXIBILITY FACTORS

The cylinder-to-cylinder flexibility factors, e_a and e_b are given by the following:

at the inside junction	at the outside junction	Note:
$e_a = e$	$e_b = e$	If there is no outer cylinder $e_b = 1$
$C_1 = \frac{l_a}{\sqrt{a t_a}}$	$C_1 = \frac{l_b}{\sqrt{b t_b}}$	
$C_2 = \frac{t_s}{t_a}$	$C_2 = \frac{t_o}{t_b}$	
$C_3 = \frac{E_a}{E_s}$	$C_3 = \frac{E_b}{E_o}$	

Calculate C_4, C_5, C_6, C_7 and C_8 with the appropriate values of C_1, C_2 and C_3 for the inside and outside junction.

when C_2 is less than 1.0

$$C_4 = -0.364661 + \frac{0.338172}{C_2} - \frac{0.0366351}{C_2^{\,2}}$$

$$C_5 = -1.06871 + \frac{1.01164}{C_2} - \frac{0.122627}{C_2^{\,2}}$$

$$C_6 = 0.0696709 + 1.76415C_2 - 5.46103C_2^{\,3}$$

$$C_7 = -0.142734 + 0.918656C_2 - 2.00749C_2^{\,3}$$

when C_2 is greater than or equal to 1.0

$$C_4 = \frac{3.37310 - 1.707962C_2 + 0.226216C_2^{\,2}}{1000}$$

$$C_5 = -0.403287 + 0.320037C_2 - 0.0307508C_2^{\,2}$$

$$C_6 = -0.684978 + 0.582549C_2 - 0.0547812C_2^{\,2}$$

$$C_7 = -0.201334 + 0.168201C_2 - 0.0157280C_2^{\,2}$$

and

$$C_8 = \frac{\frac{C_5}{C_1^{\,2}} - \frac{C_6}{C_1^{\,3}} + \frac{C_7}{C_1^{\,4}} - C_4}{C_3^{\,0.2}}$$

$$e = 2.718^{C_8}$$

Notes:

(1) When C_1 is less than 0.4, C_1 shall be set equal to 0.4.

(2) When C_2 and C_3 are both equal to 1.0, e shall be set equal to 1.0.

RCB-8.4 ELEMENT GEOMETRY FACTORS

Calculations for the stiffness and stresses are dependent upon the flexible element geometry factors given by:

$$y_1 = \frac{e_a}{D_a \beta_a}\left(k_3 - \frac{k_2^{\,2}}{2k_1}\right)$$ Note: k values are evaluated using Ω_a for the inner cylinder.

$$y_2 = \frac{e_b}{D_b \beta_b}\left(k_3 - \frac{k_2^{\,2}}{2k_1}\right)$$ Note: k values are evaluated using Ω_b for the outer cylinder.

$$c = \frac{a^2}{b^2 - a^2}$$

$$d = \frac{b}{a}$$

$$x_1 = \frac{-ac(0.769 + 1.428d^2)}{D_E}$$

$$x_2 = \frac{2.2ac\,d^2}{D_E}$$

$$x_3 = \frac{-a^2[1.538 + ln(d)\{2 + c(2 + 3.714d^2)\}]}{4D_E}$$

$$x_4 = \frac{-2.2bc}{D_E}$$

$$x_5 = \frac{bc(0.769d^2 + 1.428)}{D_E}$$

$$x_6 = \frac{-ab(1.538 + 5.714c\,ln(d))}{4D_E}$$

$$X = (x_1 - y_1)(x_5 + y_2) - x_2x_4$$

$$x_7 = \frac{x_2x_6 - x_3x_5 - x_3y_2}{X}$$

$$x_8 = \frac{x_3x_4 - x_1x_6 + x_6y_1}{X}$$

$$q_1 = 0.385a^2 + 1.429cb^2\,ln(d)$$

$$q_2 = (-0.385 - 1.429c\,ln(d))b^2$$

$$q_3 = 0.25ab^2\left\{\frac{1.269}{cd^2} + 3.714c(ln(d))^2\right\}$$

$$g = \frac{a}{b}$$

$$g^* = \frac{g^4}{1 - g^2}ln(g)$$

$$m_1 = 0.51 - 0.635g^2 + g^*$$

$$m_2 = 0.635(1 - g^2) + g^*$$

$$m_3 = 2.357g^2 + 3.714g^*$$

where

a and b are defined in Paragraph RCB-8.22 and β_a, β_b, D_a, D_b, D_E, e_a, e_b, k_1, k_2 and k_3 are defined in Paragraph RCB-8.3.

RCB-8.5 STIFFNESS MULTIPLIER

Compute the ratios $\frac{y_a}{G}, \frac{y_b}{G}, \frac{r'_a}{t_a}, \frac{r'_b}{t_b}, \frac{r'_a}{h}, \frac{r'_b}{h}$ and $\frac{G}{t_E}$

RCB-8.51 If $y_a/G \geq 0.075$, $\gamma_a = 1$. If $y_a/G < 0.075$, calculate γ_a per the formula given below. If $y_b/G \geq 0.075$, $\gamma_b = 1$. If $y_b/G < 0.075$, calculate γ_b per the formula given below.

$$\gamma_x = 0.961 - 11.293(y_x/G) + 450.903(y_x/G)^2 - 5647(y_x/G)^3 + 23140(y_x/G)^4$$

RCB-8.52 If both r_a and r_b are present, Fig. RCB-8.21 (a) and $r_a = r_b$, determine value of m from Figure RCB-8.51 and calculate the term, $\propto$, according to the following equations:

For $\frac{G}{t_E} < 160$, $\propto = 4.30(G/t_E)^{-0.287}$

For $\frac{G}{t_E} \geq 160$, $\propto = 2.92(G/t_E)^{-0.211}$

The final stiffness multiplier is represented by the product, $K = \propto m \gamma_a \gamma_b$.

RCB-8.53 If both r_a and r_b are present, Fig. RCB-8.21 (a), but not equal, determine m_{o1} from Fig. RCB-8.52 using r'_b, m from Fig. RCB-8.51 using r'_a, and m_{o2} from Figure RCB-8.52 using r'_a. Calculate $\propto$ as shown in Paragraph RCB-8.52 above.

The final stiffness multiplier is represented by the product,

$$K = \frac{\propto m m_{o1} \gamma_a \gamma_b}{m_{o2}}$$

RCB-8.54 If only r_b is present, Fig. RCB-8.21 (b), determine m from Figure RCB-8.52 and calculate the term, λ, according to the following equations:

For $\frac{G}{t_E} < 160$, $\lambda = 2.13(G/t_E)^{-0.149}$

For $\frac{G}{t_E} \geq 160$, $\lambda = 1.86(G/t_E)^{-0.122}$

The final stiffness multiplier is represented by the product, $K = \lambda m \gamma_a \gamma_b$

RCB-8.55 If only r_a is present, Fig. RCB-8.21 (c) determine m from Figure RCB-8.51 using r'_a and calculate $\propto$, from Paragraph RCB-8.52. Determine m_o from Figure RCB-8.52 using $r'_b = r'_a$ and calculate, λ, from Paragraph RCB-8.54.

The final stiffness multiplier is represented by the product,

$$K = \frac{\propto m \lambda m_o \gamma_a \gamma_b}{\lambda m_o - \propto m + \propto m \lambda m_o}$$

RCB-8.56 If both r_a and r_b equal 0, Fig. RCB-8.21 (d), $K = \gamma_a \gamma_b$.

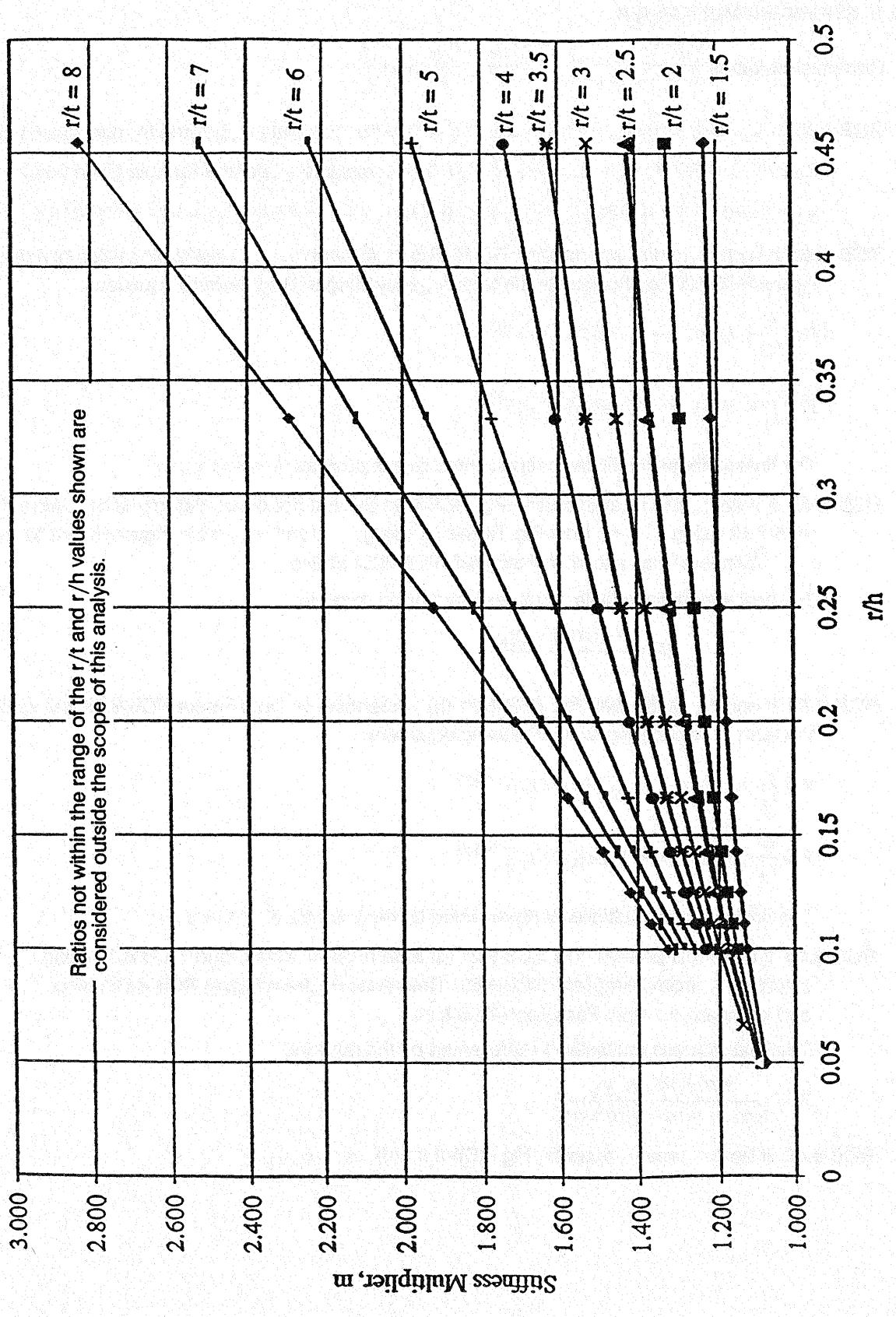

FIGURE RCB-8.51
Stiffness Multiplier as a Function of Flexible Shell Element Dimensionless Parameters (Inner and Outer Knuckle Radii Equal)

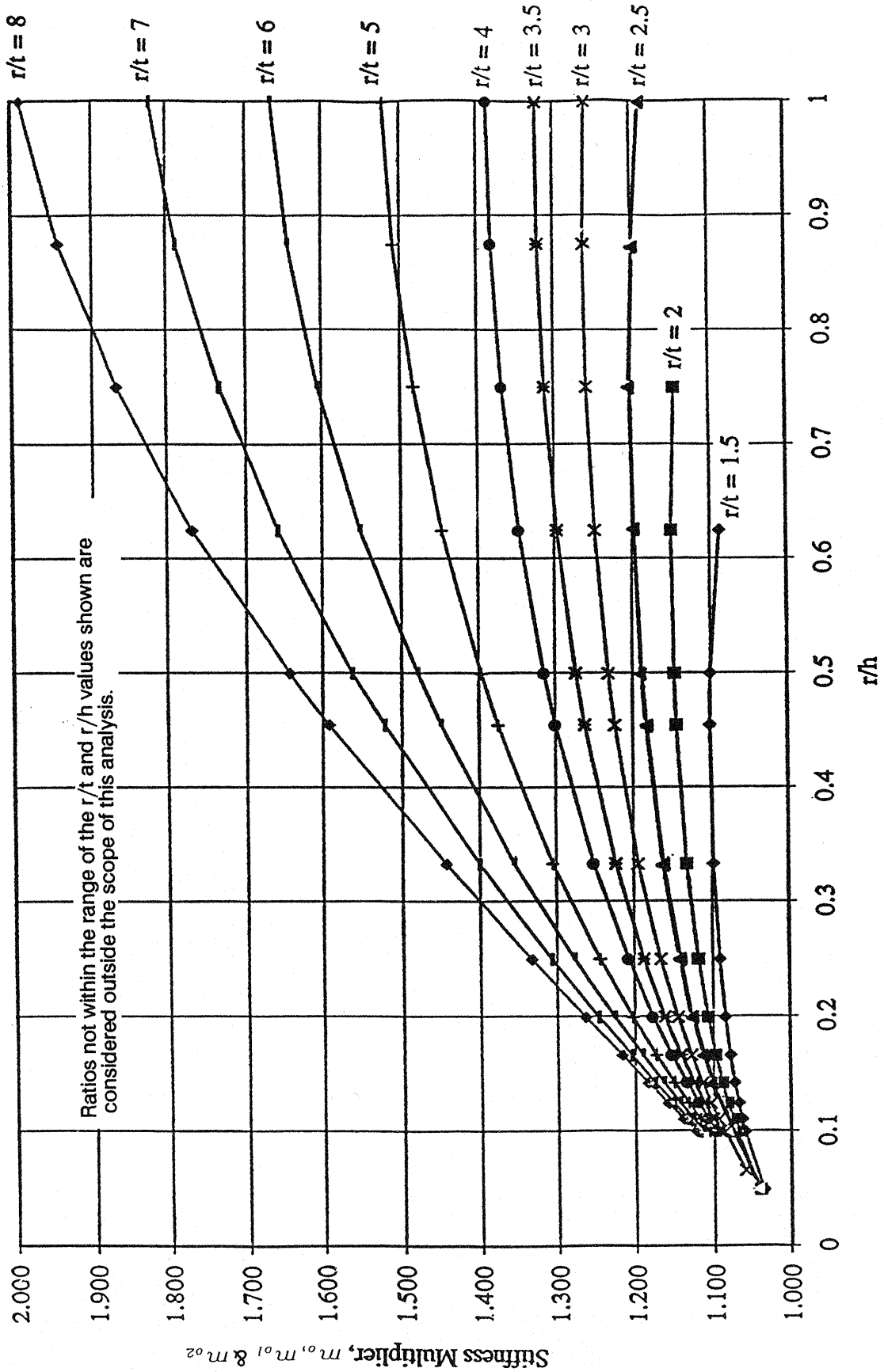

FIGURE RCB-8.52
Stiffness Multiplier as a Function of Flexible Shell Element Dimensionless Parameters
(No Inner Knuckle)

RCB-8.6 EQUIVALENT FLEXIBLE ELEMENT STIFFNESS

When there is only one flexible shell element (See Paragraph RCB-8.2) in a shell, the spring rate, lbs/inch (kN/mm), is given by:

$$S_{jE} = \frac{2\pi a D_E \quad K}{x_7 q_1 + x_8 q_2 + q_3}$$

where the terms are defined in Paragraphs RCB-8.22, RCB-8.3, RCB-8.4, and RCB-8.5.

When two or more flexible elements are used in a shell, the overall effective spring rate of the system of flexible elements is given by:

$$S_j = \frac{1}{\frac{1}{S_{jE1}} + \frac{1}{S_{jE2}} \cdots\cdots + \frac{1}{S_{jEn}}}$$

where

S_j = Overall effective spring rate, lbs/inch (kN/mm), as used in Paragraph RCB-7.161

$S_{jE1}, S_{jE2} \cdots S_{jEn}$ = Respective spring rates of each flexible shell element, calculated individually from the above formula, lbs/inch (kN/mm)

Note: A single convolute consists of two flexible shell elements.

RCB-8.7 INDUCED AXIAL FORCE

The calculation of the flexible shell element stresses is contingent upon calculating an induced axial force acting on each element. This axial force on the inner shell circumference shall be calculated for each condition as described in Paragraphs RCB-8.11 through RCB-8.13 and is given by:

$$F_{ax} = \frac{a P_s^*}{2} \quad \text{, lbs./inch}$$

(Metric) $$F_{ax} = \frac{a P_s^*}{2} x 10^{-6} \quad \text{, kN/mm}$$

where $P_s^* = P_1 + P_s' - P_d$

and $P_1 = P_t - P_t'$

TABLE RCB-8.7
F_{ax} PARAMETER VARIATIONS

CONDITION	P_1	P_s'	P_d
Differential Expansion Only	0	0	P_d
Shell side Pressure Only, Note (1)	0	P_s'	0
Tube side Pressure Only, Note (1)	P_1	0	0
Shell side Pressure + Tube side Pressure	P_1	P_s'	0
Shell side Pressure Only + Differential Expansion, Note (1)	0	P_s'	P_d
Tube side Pressure Only + Differential Expansion, Note (1)	P_1	0	P_d
Shell side Pressure + Tube side Pressure + Differential Expansion	P_1	P_s'	P_d

Notes:

(1) This condition is not applicable for differential pressure design per Paragraph RCB-7.165.

(2) a is defined in Paragraph RCB-8.22.

(3) Other symbols are as defined in Paragraphs RCB-7.161, RCB-7.163 and RCB-7.164, using actual shell and tubesheet thicknesses for each condition under consideration per Paragraphs RCB-8.11 through RCB-8.13. ALGEBRAIC SIGNS MUST BE RETAINED.

RCB-8.8 FLEXIBLE ELEMENT MOMENTS AND STRESSES

The following paragraphs provide the formulae to calculate the predicted stress levels in each flexible element. Each flexible element configuration will have a unique set of stresses for each condition analyzed.

RCB-8.81 MOMENTS AT THE JUNCTIONS

The stresses in the annular flat plate and the cylindrical portions of a flexible element are dependent upon the moments, inch-lbs per inch (mm-kN per mm) of circumference, at the inside and outside junctions. The moments are given by:

$$M_a = \frac{(x_5 + y_2)(-\theta_a - F_{ax}x_3 - \beta_a Z_a) + x_2\left(F_{ax}x_6 + \theta_b - \frac{\beta_b k_2 Z_b}{k_1}\right)}{X}$$

$$M_b = \frac{(y_1 - x_1)\left(\theta_b + F_{ax}x_6 - \frac{\beta_b k_2 Z_b}{k_1}\right) + x_4(F_{ax}x_3 + \theta_a + \beta_a Z_a)}{X}$$

where

$$Z_a = \frac{P_s a^2 - 0.3aF_{ax}}{E_a t_a}$$

$$Z_b = \frac{P_s b^2 - 0.3\left\{aF_{ax} + \left(\frac{b^2 - a^2}{2}\right)P_s\right\}}{E_b t_b}$$

$$\theta_a = \frac{P_s b^3}{8D_E}\left(-2gm_2 - \frac{m_3}{g} - \frac{g^3}{2} - 2g^3 ln(g)\right)$$

$$\theta_b = \frac{P_s b^3}{8D_E}(-2m_2 - m_3 + 0.5 - g^2)$$

P_s = Shell side design pressure, psi (kPa), for the condition under consideration (including 0 or negative value if vacuum, as applicable)

F_{ax} = The term as calculated in Paragraph RCB-8.7 dependent upon the condition under consideration

k_1 and k_2 = The terms as calculated in Paragraph RCB-8.3, using Ω_b at the outer cylinder

The remaining terms are as defined in Paragraphs RCB-8.22, RCB-8.3 and RCB-8.4.

RCB-8.82 ANNULAR PLATE ELEMENT STRESSES

The annular plate meridional bending stress, psi (kPa), shall be calculated for each condition specified in Paragraphs RCB-8.11, RCB-8.12 and RCB-8.13 from the following formula:

$$S_b = \frac{6}{t_E^{\,2}}\left\{A_1 + \frac{A_2}{r^2} + A_3 r^2 + A_4 ln\left(\frac{r}{b}\right)\right\}$$

where

$$A_1 = -cM_a + cd^2 M_b + 0.65acF_{ax}ln(g) - P_s(0.325m_2 b^2 + 0.4125a^2)$$

$$A_2 = b^2(cM_a - cM_b - 0.65acF_{ax}ln(g) + 0.0875m_3 P_s b^2)$$

$$A_3 = 0.206 P_s$$

$$A_4 = 0.65\alpha(F_{ax} - 0.5\alpha P_s)$$

F_{ax} = The term as calculated in Paragraph RCB-8.7 dependent upon the condition under consideration.

P_s = Shell side design pressure, psi (kPa), for the condition under consideration (including 0 or negative value if vacuum, as applicable).

r = Radial distance, from the shell centerline to the point under consideration, inches (mm).

The remaining terms are as defined in Paragraphs RCB-8.22, RCB-8.4 and RCB-8.81.

Note:

(1) $S_{mbp} = S_b$ calculated for the shell side pressure only condition.

(2) $S_{mbd} = S_b$ calculated for the differential expansion only or tube side pressure only condition.

(3) $S_n = S_b$ calculated for all conditions as specified in Table RCB-8.7.

(4) S_{cmp} , S_{mmp} and S_{mmd} as defined by the Code, are negligible for the annular plate element within the scope of Paragraph RCB-8.

(5) The maximum annular plate stress will be located where:

$$r = \sqrt{\frac{-A_4 \pm \sqrt{A_4^2 + 16 A_3 A_2}}{4 A_3}}$$ (when P_s is not 0)

or $r = a$

or $r = b$

RCB-8.83 CYLINDRICAL ELEMENT STRESSES

The circumferential membrane stresses, psi (kPa), in the cylinders shall be calculated for each condition specified in Paragraphs RCB-8.11, RCB-8.12 and RCB-8.13 from the following formula:

$$S_m = \frac{E(\delta + v_2)}{r}$$

where

$$v_1 = \beta(y - \chi)$$

$$v_2 = B_1 \sin(v_1)\sinh(v_1) + B_2 \cos(v_1)\cosh(v_1)$$

$$\delta = \frac{r}{Et}[P_s r - 0.3 F_2]$$

$$B_1 = \frac{1}{z}\left(\frac{j_2 M}{2\beta^2 e D} - j_1 \delta\right)$$

$$B_2 = \frac{1}{z}\left(\frac{-j_1 M}{2\beta^2 e D} - j_2 \delta\right)$$

χ = The distance under consideration, as shown in Figure RCB-8.22, inches (mm)

The remaining terms are as defined in Paragraphs RCB-8.21, RCB-8.22, RCB-8.3 and RCB-8.7.

where

For the inner cylinder	For the outer cylinder
$r = a$	$r = b$
$t = t_s$ for $(y_a - \chi) < l_i$	$t = t_o$ for $(y_b - \chi) < l_o$
$t = t_a$ for $(y_a - \chi) > l_i$	$t = t_b$ for $(y_b - \chi) > l_o$
t = smaller of t_a or t_s for $(y_a - \chi) = l_i$	t = smaller of t_b or t_o for $(y_b - \chi) = l_o$
$E = E_a$	$E = E_b$
$M = M_a$	$M = M_b$
$F_2 = F_{ax}$	$F_2 = F_{ax}\left(\frac{a}{b}\right) + \left(\frac{b^2 - a^2}{2b}\right) P_s$
$e = e_a$	$e = e_b$
$D = D_a$	$D = D_b$
$\beta = \beta_a$	$\beta = \beta_b$
$y = y_a$	$y = y_b$

Note:

(1) $S_{cmp} = S_m$ calculated for the shell side pressure only condition.

(2) $S_{cmd} = S_m$ calculated for the differential expansion only or tube side pressure only condition.

(3) $S_{cmpd} = S_m$ calculated for the combined pressure and differential expansion condition.

(4) The maximum value of S_m will be located where $\chi = y_a$ or $\chi = l_a$ for the inner cylinder and where $\chi = y_b$ or $\chi = l_b$ for the outer cylinder.

RCB-8.84 MAXIMUM CYLINDER STRESS FOR CYCLE LIFE CALCULATIONS

The maximum stress, psi (kPa), for a particular set of conditions, for use in the evaluation of cycle life is given by:

$$S_{cl} = \left| \frac{6M}{t^2} \right| + \left| \frac{F_2}{t} \right|$$

where

F_2 is defined in Paragraph RCB-8.83

and

For the inner junction

$M = M_a$

t = the smaller of t_E or t_a

For the outer junction

$M = M_b$

t = the smaller of t_E or t_b

Note:

(1) A positive value of M establishes a compressive stress in the outer fiber of the cylinder under consideration.

(2) S_{cl} is a possible outer limit for establishing a stress range.

(3) S_n for the cylindrical element is equal to S_{cl}.

RCB-8.9 ALLOWABLE STRESSES

The allowable flexible element stresses shall be as defined by the Code, using an appropriate stress concentration factor for the geometry under consideration.

RCB-8.10 MINIMUM THICKNESS

The minimum thickness of flexible shell elements shall be as determined by the rules of Paragraphs RCB-8.1 through RCB-8.9. However, in no case shall the thickness in the uncorroded condition be less than 1/8" (3.2 mm) for nominal diameters 18" (457 mm) and smaller, 3/16" (4.8 mm) for nominal diameters 19" (483 mm) through 30" (762 mm), or 1/4" (6.4 mm) for nominal diameters greater than 30" (762 mm).

RCB-9 CHANNELS, COVERS, AND BONNETS

RCB-9.1 CHANNELS AND BONNETS

R-9.11 MINIMUM THICKNESS OF CHANNELS AND BONNETS

Channel and bonnet thickness is determined by the Code design formulae, plus corrosion allowance, but in no case shall the nominal thickness of channels and bonnets be less than the minimum shell thicknesses shown in Table R-3.13. The nominal total thickness for clad channels and bonnets shall be the same as for carbon steel channels.

CB-9.11 MINIMUM THICKNESS OF CHANNELS AND BONNETS

Channel and bonnet thickness is determined by the Code design formulae, plus corrosion allowance, but in no case shall the nominal thickness of channels and bonnets be less than the minimum shell thicknesses shown in Table CB-3.13. The nominal total thickness for clad channels and bonnets shall be the same as for carbon steel channels.

RCB-9.12 MINIMUM INSIDE DEPTH

For multipass channels and bonnets the inside depth shall be such that the minimum cross-over area for flow between successive tube passes is at least equal to 1.3 times the flow area through the tubes of one pass. When an axial nozzle is used, the depth at the nozzle centerline shall be a minimum of one-third the inside diameter of the nozzle.

RCB-9.13 PASS PARTITION PLATES

RCB-9.131 MINIMUM THICKNESS

The thickness of pass partitions shall not be less than the greater of that shown in Table RCB-9.131 or calculated in Paragraph RCB-9.132. Pass partition plates may be tapered to gasket width at the contact surface.

TABLE RCB-9.131

NOMINAL PASS PARTITION PLATE THICKNESS
Dimensions are in Inches (mm)

Nominal Size	Carbon Steel	Alloy Material
Less than 24 (610)	3/8 (9.5)	1/4 (6.4)
24 to 60 (610-1524)	1/2 (12.7)	3/8 (9.5)
61 to 100 (1549-2540)	5/8 (15.9)	1/2 (12.7)

RCB-9.132 PASS PARTITION PLATE FORMULA

$$t = b\sqrt{\frac{qB}{1.5S}}$$

where

t = Minimum pass partition plate thickness, inches (mm)

B = Table value (linear interpolation may be used)

q = Pressure drop across plate, psi (kPa)

S = Code allowable stress in tension, at design metal temperature, psi (kPa)

b = Plate dimension. See Table RCB-9.132, inches (mm)

TABLE RCB-9.132
PASS PARTITION DIMENSION FACTORS

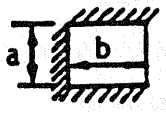 Three sides fixed One side simply supported		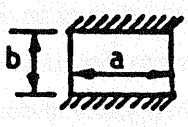 Long sides fixed Short sides simply supported		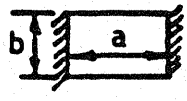 Short sides fixed Long sides simply supported	
a/b	B	a/b	B	a/b	B
0.25	0.020	1.0	0.4182	1.0	0.4182
0.50	0.081	1.2	0.4626	1.2	0.5208
0.75	0.173	1.4	0.4860	1.4	0.5988
1.0	0.307	1.6	0.4968	1.6	0.6540
1.5	0.539	1.8	0.4971	1.8	0.6912
2.0	0.657	2.0	0.4973	2.0	0.7146
3.0	0.718	∞	0.5000	∞	0.7500

RCB-9.133 PASS PARTITION WELD SIZE

The pass partition plate shall be attached with fillet welds on each side with a minimum leg of $3/4\,t$ from Paragraph RCB-9.132. Other types of attachments are allowed but shall be of equivalent strength.

RCB-9.134 SPECIAL PRECAUTIONS

Special consideration must be given to reinforcement or thickness requirements for internal partitions subjected to pulsating fluids, extreme differential pressures and/or temperatures, undue restraints or detrimental deflections under specified operating conditions or unusual start-up or maintenance conditions specified by the purchaser.

Consideration may also be given to special design configurations and/or methods of analysis which may justify reduction of pass partition plate thickness requirements.

Also, consideration should be given to potential bypass of tubeside fluid where the pass partition might pull away from the gasket due to deflection.

RCB-9.14 POSTWELD HEAT TREATMENT

Fabricated channels and bonnets shall be postweld heat treated when required by the Code or specified by the purchaser.

RCB-9.2 FLAT-CHANNEL COVER

*RCB-9.21 FLAT CHANNEL COVER DEFLECTION - MULTIPASS UNITS

The effective thickness of a flat channel cover shall be the thickness at the bottom of the pass partition groove (or the face if there is no groove) minus corrosion allowance in excess of groove depth. The thickness is to be at least that required by the appropriate Code formula and thicker if required to meet proper deflection criteria.

The recommended limit for channel cover deflection is:

0.03" (0.8 mm) for nominal diameters thru 24" (610 mm)

0.125% of nominal diameter (nominal diameter/800) for larger sizes

A method for calculation of channel cover deflection is:

$$Y = \frac{G}{ET^3}(0.0435G^3P + 0.5S_BA_Bh_g)$$

where

Y = Channel cover deflection at the center, inches (mm)

G = Gasket load reaction diameter as defined by the Code, inches (mm)

E = Modulus of elasticity at design temperature, psi (kPa)

T = Thickness under consideration, inches (mm)

P = Design pressure, psi (kPa)

S_B = Allowable bolting stress at design temperature, psi (kPa)

A_B = Actual total cross-sectional root area of bolts, square inches (mm^2)

h_g = Radial distance from diameter G to bolt circle, inches (mm)

If the calculated deflection is greater than the recommended limit, the deflection may be reduced by acceptable methods such as:

Increase channel cover thickness by the cube root of the ratio of calculated deflection to the recommended limit.

Use of strong backs.

Change type of construction.

Note: For single pass channels, or others in which there is no pass partition gasket seal against the channel cover, no deflection criteria need be considered.

R-9.22 CHANNEL COVER PASS PARTITION GROOVES

Channel covers shall be provided with approximately 3/16" (4.8 mm) deep grooves for pass partitions. In clad or applied facings, all surfaces exposed to the fluid, including gasket seating surfaces, shall have at least 1/8" (3.2 mm) nominal thickness of cladding.

CB-9.22 CHANNEL COVER PASS PARTITION GROOVES

For design pressures over 300 psi (2068 kPa), channel covers shall be provided with approximately 3/16" (4.8 mm) deep grooves for pass partitions, or other suitable means for holding the gasket in place. In clad or applied facings, all surfaces exposed to fluid, including gasket seating surfaces, shall have at least 1/8" (3.2mm) nominal thickness of cladding.

RCB-10 NOZZLES

RCB-10.1 NOZZLE CONSTRUCTION

Nozzle construction shall be in accordance with Code requirements. Shell nozzles shall not protrude beyond the inside contour of the shell if they interfere with bundle insertion or removal. Shell or channel nozzles which protrude beyond the inside contour of the main cylinder wall must be self venting or draining by notching at their intersection with the high or low point of the cylinder. If separate vent and drain connections are used, they shall be flush with the inside contour of the shell or channel wall. Flange dimensions and facing shall comply with ASME B16.5. Bolt holes shall straddle natural center lines. Flanges outside the scope of ASME B16.5 shall be in accordance with Code.

RCB-10.2 NOZZLE INSTALLATION

Radial nozzles shall be considered as standard. Other types of nozzles may be used, by agreement between manufacturer and purchaser.

R-10.3 PIPE TAP CONNECTIONS

All pipe tap connections shall be a minimum of 6000 psi standard couplings or equivalent. Each connection shall be fitted with a round head bar stock plug conforming to ASME B16.11 of the same material as the connection. Alternate plug materials may be used when galling is anticipated, except cast iron plugs shall not be used.

C-10.3 PIPE TAP CONNECTIONS

All pipe tap connections shall be a minimum of 3000 psi standard couplings or equivalent.

B-10.3 PIPE TAP CONNECTIONS

All pipe tap connections shall be a minimum of 3000 psi standard couplings or equivalent. Each connection shall be fitted with a bar stock plug of the same material as the connection. Alternate plug materials may be used when galling is anticipated, except cast iron plugs shall not be used.

RCB-10.31 VENT AND DRAIN CONNECTIONS

All high and low points on shell and tube sides of an exchanger not otherwise vented or drained by nozzles shall be provided with 3/4" minimum NPS connections for vent and drain.

R-10.32 PRESSURE GAGE CONNECTIONS

All flanged nozzles 2" NPS or larger shall be provided with one connection of 3/4" minimum NPS for a pressure gage unless special considerations allow it to be omitted. See Paragraph RB-10.4.

C-10.32 PRESSURE GAGE CONNECTIONS

Pressure gage connections shall be as specified by the purchaser. See Paragraph C-10.4.

B-10.32 PRESSURE GAGE CONNECTIONS

All flanged nozzles 2" NPS or larger shall be provided with one connection of 1/2" minimum NPS for a pressure gage unless special considerations allow it to be omitted. See Paragraph RB-10.4.

RB-10.33 THERMOMETER CONNECTIONS

All flanged nozzles 4" NPS or larger shall be provided with one connection of 1" minimum NPS for a thermometer unless special considerations allow it to be omitted. See Paragraph RB-10.4.

C-10.33 THERMOMETER CONNECTIONS

Thermometer connections shall be as specified by the purchaser. See Paragraph C-10.4.

RB-10.4 STACKED UNITS

Intermediate nozzles between units shall have flat or raised face flanges. Pressure gage and thermometer connections may be omitted in one of the two mating connections of units connected in series. Bolting in flanges of mating connections between stacked exchangers shall be removable without moving the exchangers.

C-10.4 STACKED UNITS

Intermediate nozzles between units shall have flat or raised face flanges. Pressure gage and thermometer connections may be omitted in one of the two mating connections of units connected in series.

RCB-10.5 SPLIT FLANGE DESIGN

Circumstances of fabrication, installation, or maintenance may preclude the use of the normal integral or loose full ring nozzle flanges. Under these conditions, double split ring flanges may be used in accordance with the Code.

*RCB-10.6 NOZZLES LOADINGS

Heat exchangers are not intended to serve as anchor points for piping; therefore, for purposes of design, nozzle loads are assumed to be negligible, unless the purchaser specifically details such loads in his inquiry as indicated in Figure RGP-RCB-10.6. The analysis and any modifications in the design or construction of the exchanger to cope with these loads shall be to the purchaser's account.

The "Recommended Good Practice" section of these standards provides the designer with additional information regarding imposed piping loads.

RCB-11 END FLANGES AND BOLTING

Flanges and bolting for external joints shall be in accordance with Code design rules, subject to the limitations set forth in the following paragraphs.

R-11.1 MINIMUM BOLT SIZE

The minimum permissible bolt diameter is 3/4" (M20). Sizes 1" and smaller shall be Coarse Thread Series, and larger sizes shall be 8-Pitch Thread Series. Dimensional standards are included in Section 9, Table D-5. Metric thread pitch is shown in Section 9, Table D-5M.

C-11.1 MINIMUM BOLT SIZE

The minimum recommended bolt diameter is 1/2" (M14). If bolting smaller than 1/2" (M14) is used, precautions shall be taken to avoid overstressing the bolting. Dimensional standards are included in Section 9, Table D-5. Metric bolting is shown in Section 9, Table D-5M.

B-11.1 MINIMUM BOLT SIZE

The minimum permissible bolt diameter shall be 5/8" (M16). Dimensional standards are included in Section 9, Table D-5. Metric bolting is shown in Section 9, Table D-5M.

RCB-11.2 BOLT CIRCLE LAYOUT

RCB-11.21 MINIMUM RECOMMENDED BOLT SPACING

The minimum recommended spacing between bolt centers is given in Section 9, Table D-5 or D-5M.

RCB-11.22 MAXIMUM RECOMMENDED BOLT SPACING

The maximum recommended spacing between bolt centers is:

$$B_{max} = 2d_B + \frac{6t}{(m + 0.5)}$$

where

B = Bolt spacing, centerline to centerline, inches (mm)

d_B = Nominal bolt diameter, inches (mm)

t = Flange thickness, inches (mm)

m = Gasket factor used in Code flange calculations

RCB-11.23 LOAD CONCENTRATION FACTOR

When the distance between bolt centerlines exceeds recommended B_{max}, the total flange moment determined by Code design methods shall be multiplied by a correction factor equal to:

$$\sqrt{\frac{B}{B_{max}}}$$

where B is the actual bolt spacing as defined by Paragraph RCB-11.22.

RCB-11.24 BOLT ORIENTATION

Bolts shall be evenly spaced and normally shall straddle both natural centerlines of the exchanger. For horizontal units, the natural centerlines shall be considered to be the horizontal and vertical centerlines of the exchanger. In special cases, the bolt count may be changed from a multiple of four.

RCB-11.3 MINIMUM RECOMMENDED WRENCH AND NUT CLEARANCES

Minimum recommended wrench and nut clearances are given in Section 9, Table D-5 and Table D-5M.

RCB-11.4 BOLT TYPE

Except for special design considerations, flanges shall be through-bolted with stud bolts, threaded full length with a removable nut on each end. One full stud thread shall extend beyond each nut to indicate full engagement.

*RCB-11.5 LARGE DIAMETER LOW PRESSURE FLANGES

See "Recommended Good Practice" section.

*RCB-11.6 BOLTING-ASSEMBLY AND MAINTENANCE

See "Recommended Good Practice" section.

(Note: This section is not metricated.)

V-1 SCOPE AND GENERAL

V-1.1 SCOPE

Fluid flow, inter-related with heat exchanger geometry, can cause heat exchanger tubes to vibrate. This phenomenon is highly complex and the present state-of-the-art is such that the solution to this problem is difficult to define. This section defines the basic data which should be considered when evaluating potential flow induced vibration problems associated with heat exchangers. When potential flow induced vibration problems are requested to be evaluated, the relationships presented in this section and/or other methods may be used. Due to the complexity of the problem, the TEMA guarantee does not cover vibration damage.

V-1.2 GENERAL

Damaging tube vibration can occur under certain conditions of shell side flow relative to baffle configuration and unsupported tube span. The maximum unsupported tube spans in Table RCB-4.52 do not consider potential flow induced vibration problems. In those cases, where the analysis indicates the probability of destructive vibration, the user should refer to Paragraph V-13.

V-2 VIBRATION DAMAGE PATTERNS

Mechanical failure of tubes resulting from flow induced vibration may occur in various forms. Damage can result from any of the following independent conditions, or combinations thereof.

V-2.1 COLLISION DAMAGE

Impact of the tubes against each other or against the vessel wall, due to large amplitudes of the vibrating tube, can result in failure. The impacted area of the tube develops the characteristic, flattened, boat shape spot, generally at the mid-span of the unsupported length. The tube wall eventually wears thin, causing failure.

V-2.2 BAFFLE DAMAGE

Baffle tube holes require a manufacturing clearance (see Paragraph RCB-4.2) over the tube outer diameter to facilitate fabrication. When large fluid forces are present, the tube can impact the baffle hole causing thinning of the tube wall in a circumferential, uneven manner, usually the width of the baffle thickness. Continuous thinning over a period of time results in tube failure.

V-2.3 TUBESHEET CLAMPING EFFECT

Tubes may be expanded into the tubesheet to minimize the crevice between the outer tube wall and the tubesheet hole. The natural frequency of the tube span adjacent to the tubesheet is increased by the clamping effect. However, the stresses due to any lateral deflection of the tube are also maximum at the location where the tube emerges from the tubesheet, contributing to possible tube breakage.

V-2.4 MATERIAL DEFECT PROPAGATION

Designs which were determined to be free of harmful vibrations will contain tubes that vibrate with very small amplitude due to the baffle tube hole clearances and the flexibility of the tube span. Such low level stress fluctuations are harmless in homogeneous material. Flaws contained within the material and strategically oriented with respect to the stress field, can readily propagate and actuate tube failure. Corrosion and erosion can add to such failure mechanisms.

V-2.5 ACOUSTIC VIBRATION

Acoustic resonance is due to gas column oscillation and is excited by phased vortex shedding. The oscillation creates an acoustic vibration of a standing wave type. The generated sound wave will not affect the tube bundle unless the acoustic resonant frequency approaches the tube natural frequency, although the heat exchanger shell and the attached piping may vibrate, accompanied with loud noise. When the acoustic resonant frequency approaches the tube natural frequency, any tendency toward tube vibration will be accentuated with possible tube failure.

V-3 FAILURE REGIONS

Tube failures have been reported in nearly all locations within a heat exchanger. Locations of relatively flexible tube spans and/or high flow velocities are regions of primary concern.

V-3.1 U-BENDS

Outer rows of U-bends have a lower natural frequency of vibration and, therefore, are more susceptible to flow induced vibration failures than the inner rows.

V-3.2 NOZZLE ENTRANCE AND EXIT AREA

Impingement plates, large outer tube limits and small nozzle diameters can contribute to restricted entrance and exit areas. These restricted areas usually create high local velocities which can result in producing damaging flow induced vibration.

V-3.3 TUBESHEET REGION

Unsupported tube spans adjacent to the tubesheet are frequently longer than those in the baffled region of the heat exchanger, and result in lower natural frequencies. Entrance and exit areas are common to this region. The possible high local velocities, in conjunction with the lower natural frequency, make this a region of primary concern in preventing damaging vibrations.

V-3.4 BAFFLE REGION

Tubes located in baffle windows have unsupported spans equal to multiples of the baffle spacing. Long unsupported tube spans result in reduced natural frequency of vibration and have a greater tendency to vibrate.

V-3.5 OBSTRUCTIONS

Any obstruction to flow such as tie rods, sealing strips and impingement plates may cause high localized velocities which can initiate vibration in the immediate vicinity of the obstruction.

V-4 DIMENSIONLESS NUMBERS

V-4.1 STROUHAL NUMBER

Shedding of vortices from isolated tubes in a fluid medium is correlated by the Strouhal Number, which is given by:

$$S = \frac{f_s d_o}{12V}$$

where

f_s = Vortex shedding frequency, cycles/sec

V = Crossflow velocity of the fluid relative to the tube, ft/sec

d_o = Outside diameter of tube, inches

For integrally finned tubes:

d_o = Fin root diameter, inches

Note: In closely spaced tube arrays, the rhythmic shedding of vortices degenerates into a broad turbulence and a correlation based on Strouhal Number alone is inadequate.

V-4.2 FLUID ELASTIC PARAMETER

A dimensionless parameter used in the correlations to predict flow induced vibration is given by:

$$X = \frac{144 w_o \delta_T}{\rho_o d_o^{\,2}}$$

where

w_o = Effective weight of the tube per unit length, defined in Paragraph V-7.1, lb/ft

δ_T = Logarithmic decrement in the tube unsupported span (see Paragraph V-8)

ρ_o = Density of the shell side fluid at its local bulk temperature, lb/ft^3

d_o = Outside diameter of tube, inches

For integrally finned tubes:

d_o = Fin root diameter, inches

V-5 NATURAL FREQUENCY

V-5.1 GENERAL

Most heat exchangers have multiple baffle supports and varied individual unsupported spans. Calculation of the natural frequency of the heat exchanger tube is an essential step in estimating its potential for flow induced vibration failure. The current state-of-the-art flow induced vibration correlations are not sophisticated enough to warrant treating the multi-span tube vibration problem (or mode shapes other than the fundamental) in one comprehensive analysis. Therefore, the potential for vibration is evaluated for each individual unsupported span, with the velocity and natural frequency considered being that of the unsupported span under examination. For more complex mode shapes and multi-spans of unequal lengths, see Paragraph V-14 Reference (10).

V-5.2 FACTORS AFFECTING NATURAL FREQUENCY

The individual unsupported span natural frequency is affected by:

(1) Tube elastic and inertial properties and tube geometry.

(2) Span shape.

(3) Type of support at each end of the unsupported span.

(4) Axial loading on the tube unsupported span. (see Paragraph V-6)

V-5.21 SPAN SHAPES

The basic span shapes are the straight span and the U-bend span.

V-5.22 SPAN SUPPORTS

The common support conditions are:

(1) Fixed at the tubesheet and simply supported at the baffle.

(2) Simply supported at each baffle.

The baffle supports have clearances which render them non-linear when analyzed as a support. The tubesheet is not rigid and, therefore, the "built-in" assumption is only approximate. These approximations are known to have minor effects on the calculated natural frequency.

V-5.3 FUNDAMENTAL NATURAL FREQUENCY CALCULATION

The value of the fundamental natural frequency of a tube unsupported span can be calculated for the combinations of span shape and end support conditions using Table V-5.3

where

f_n = Fundamental natural frequency of the tube unsupported span, cycles/sec

l = Tube unsupported span as shown in Table V-5.3, inches

E = Elastic modulus of tube material at the tube metal temperature, psi (see Paragraph RCB-1.43)

w_o = Effective weight of the tube per unit length, defined in Paragraph V-7.1, lb/ft

I = Moment of inertia of the tube cross section, inches^4 is given by:

$$I = \frac{\pi}{64}(d_o{}^4 - d_i{}^4)$$

d_i = Tube inside diameter, inches

d_o = Outside diameter of tube, inches

For integrally finned tubes:

d_o = Fin root diameter, inches

TABLE V-5.3
FUNDAMENTAL NATURAL FREQUENCY

Span Geometry	Equation	Nomenclature
(1) Baffles 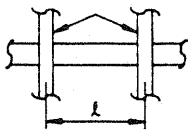 Edge condition: both ends simply supported	$f_n = 10.838 \frac{AC}{l^2}\left[\frac{EI}{w_0}\right]^{1/2}$	A = Tube axial stress multiplier. See Paragraph V-6 C = Constant depending on edge condition geometry.
(2) Tubesheet Baffle 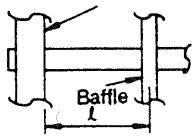 Edge condition: one end fixed, other end simply supported		
(3) Tubesheets 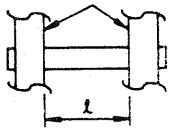 Edge condition: both ends fixed		

Span Geometry	C
1	9.9
2	15.42
3	22.37

Span Geometry	Equation	Nomenclature
(4) 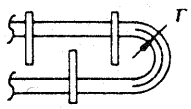 Edge condition: both ends simply supported	$f_n = 68.06 \frac{C_u}{r^2}\left[\frac{EI}{w_0}\right]^{1/2}$	r = Mean bend radius, inches C_u = Mode constant of U-bend
(5) 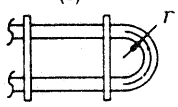 Edge condition: both ends simply supported		
(6) 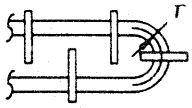 Edge condition: both ends simply supported		
(7) 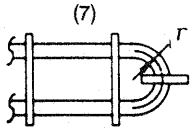 Edge condition: both ends simply supported		

Span Geometry	C_u Figure
4	V-5.3
5	V-5.3.1
6	V-5.3.2
7	V-5.3.3

FIGURE V-5.3
U-BEND MODE CONSTANT, C_u

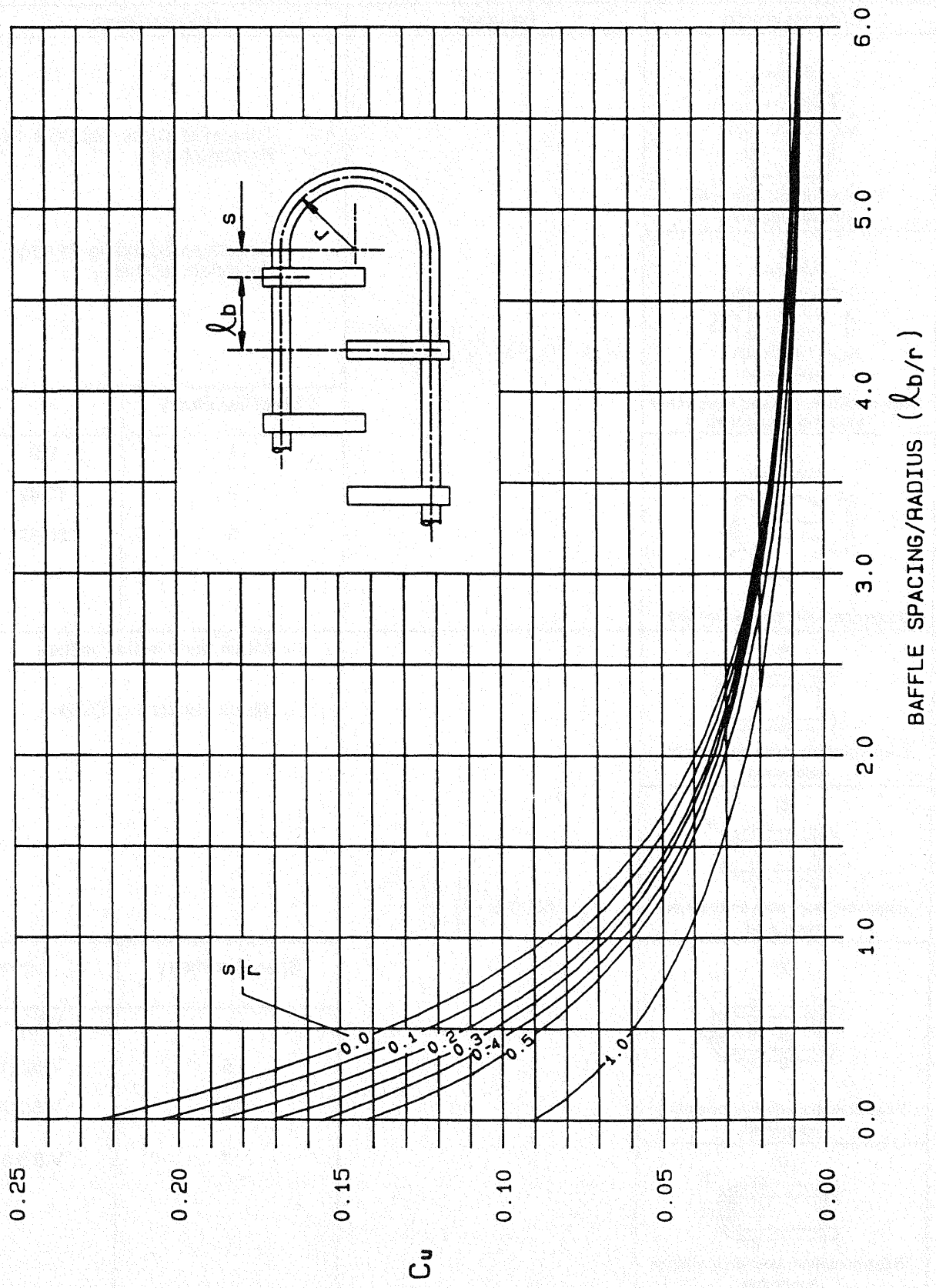

FIGURE V-5.3.1
U-BEND MODE CONSTANT, C_u

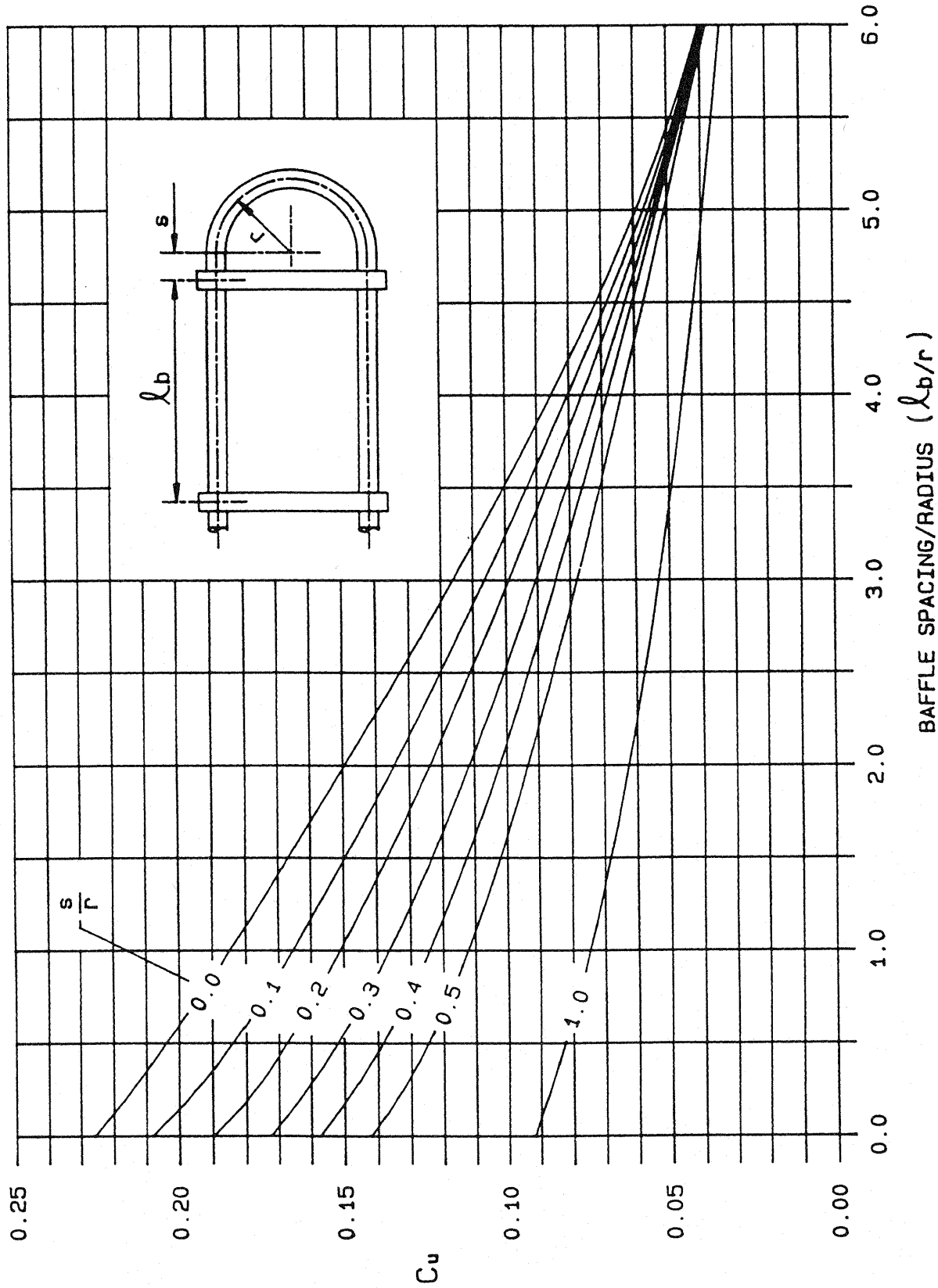

FIGURE V-5.3.2
U-BEND MODE CONSTANT, C_u

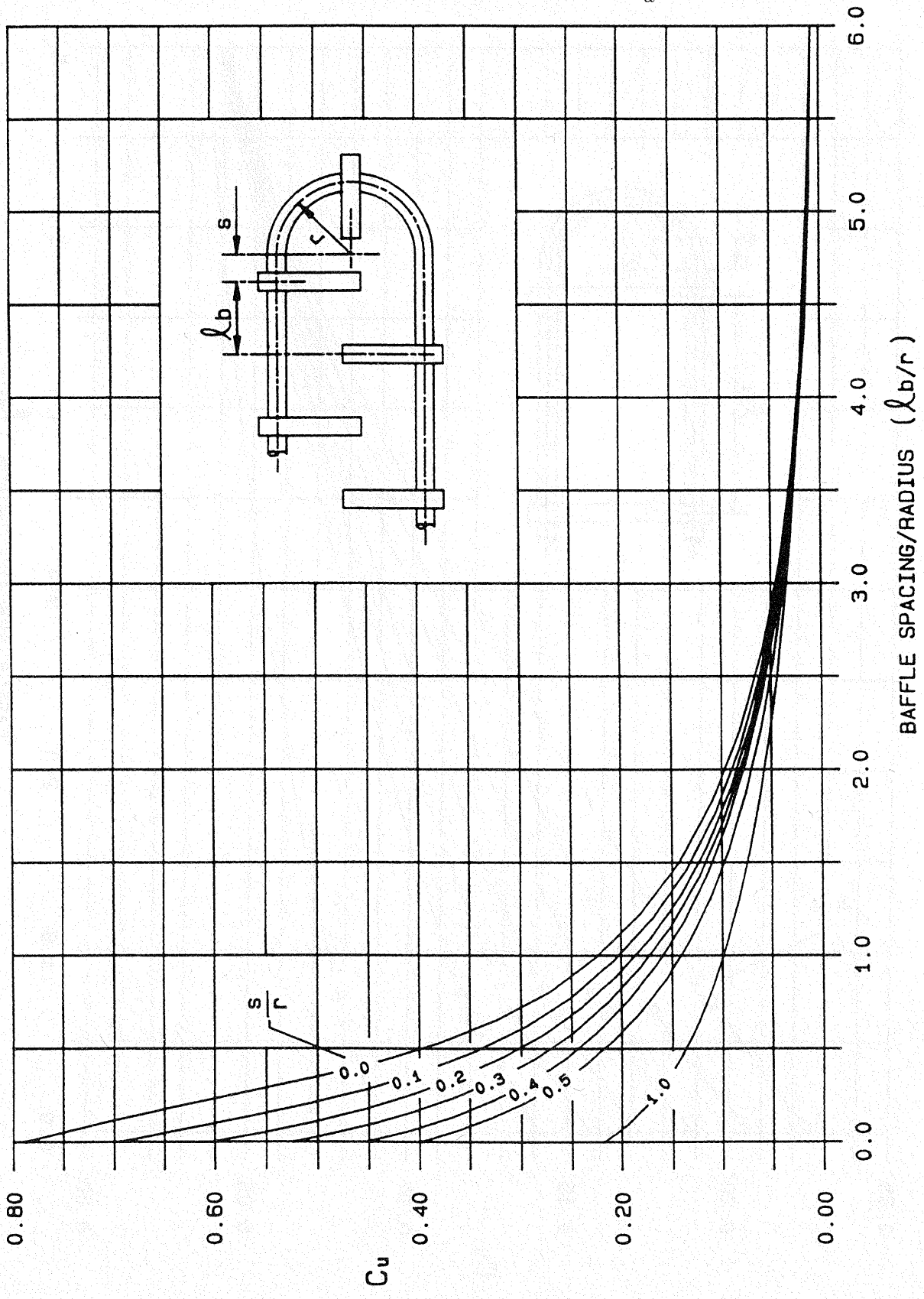

FIGURE V-5.3.3
U-BEND MODE CONSTANT, C_u

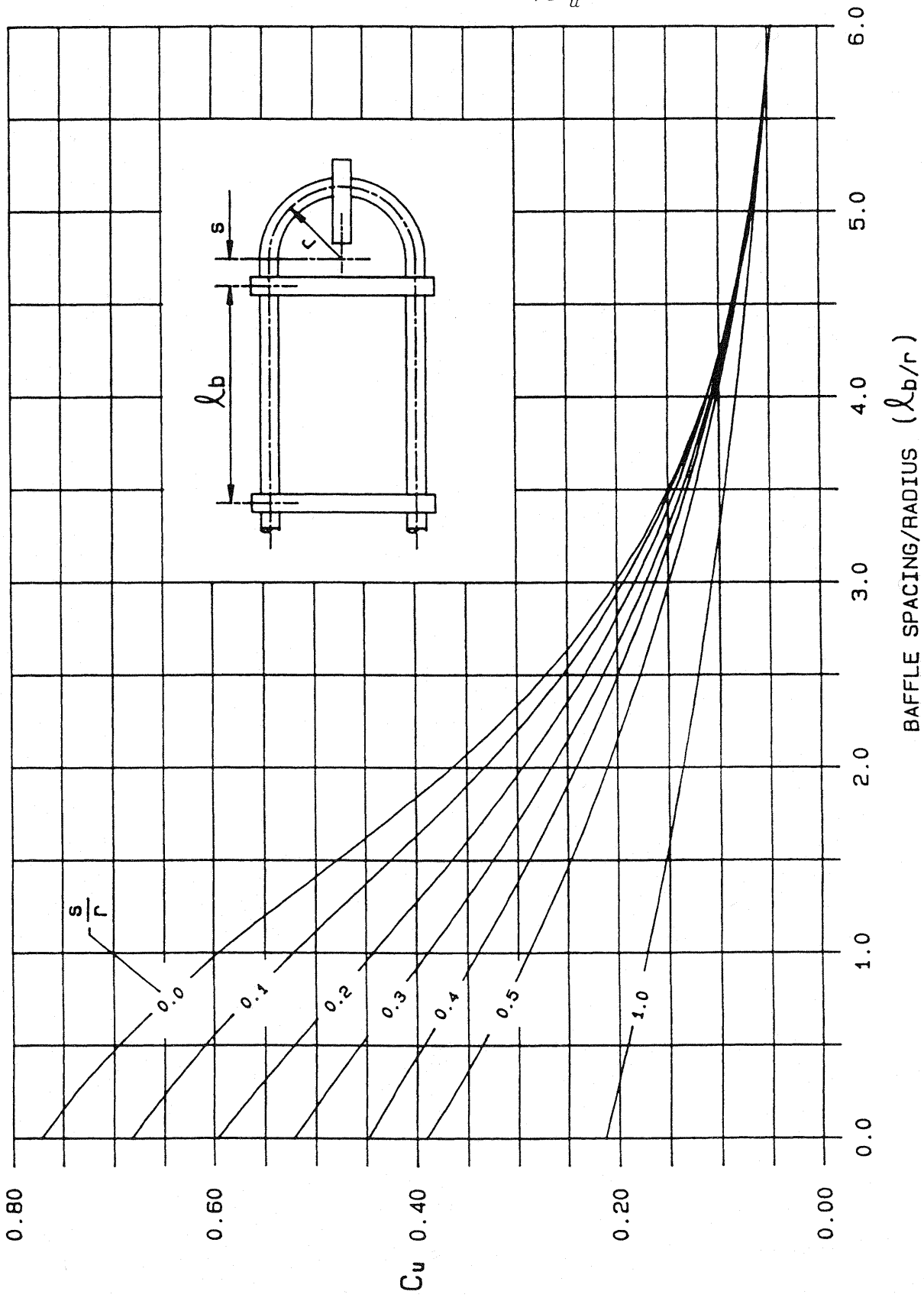

V-6 AXIAL TUBE STRESS

V-6.1 AXIAL TUBE STRESS MULTIPLIER

By the very function of a heat exchanger, the tubes are subjected to axial loads. Compressive axial loads decrease the tube natural frequency, and tensile loads tend to increase it. The resulting tube axial stress multiplier for a given tube unsupported span is determined by the tube end support conditions.

$$A = \left(1 + \frac{F}{F_{CR}} \right)^{1/2}$$

where

$$F = S_t A_t$$

S_t = Tube longitudinal stress, psi (for fixed tubesheet exchanger, S_t may be calculated from Paragraph RCB-7.23)

A_t = Tube metal cross sectional area, inches ^{2} (see Table D-7)

$$F_{CR} = \frac{K^2 E I}{l^2}$$

K = π for both ends simply supported

K = 4.49 for one end fixed, other end simply supported

K = 2 π for both ends fixed

E = Elastic modulus of tube material at the tube metal temperature, psi (see Paragraph RCB-1.43)

l = Tube unsupported span, inches

I = Moment of inertia of the tube cross-section, inches ^{4} (see Paragraph V-5.3 and Table D-7)

V-6.2 U-TUBES

For some applications U-tubes may develop high levels of axial stress. A method to compute the tube axial stresses in the legs of U-tube exchangers is given in Paragraph V-14, Reference (1).

V-7 EFFECTIVE TUBE MASS

To simplify the application of the formulae, the constants have been modified to enable the use of weight instead of mass.

V-7.1 EFFECTIVE TUBE WEIGHT

Effective tube weight is defined as:

$$w_0 = w_t + w_{fi} + H_m$$

where

w_t = Total metal weight per unit length of tube, lb/ft (see Table D-7)

w_{fi} = $0.00545 \rho_i d_i^{\ 2}$ = Weight of fluid inside the tube per unit length of tube, lb/ft

H_m = Hydrodynamic mass from Paragraph V-7.11

where

ρ_i = Density of fluid inside the tube at the local tube side fluid bulk temperature, lb/ft^3

d_i = Inside diameter of tube, inches

V-7.11 HYDRODYNAMIC MASS

Hydrodynamic mass is an effect which increases the apparent weight of the vibrating body due to the displacement of the shell side fluid resulting from:

(1) Motion of the vibrating tube

(2) The proximity of other tubes within the bundle

(3) The relative location of the shell wall

Hydrodynamic mass is defined as:

$$H_m = C_m w_{fo}$$

where

C_m = Added mass coefficient from Figure V-7.11

w_{fo} = $0.00545 \rho_o d_o^{\ 2}$ = Weight of fluid displaced by the tube per unit length of tube, lb/ft

where

ρ_o = Density of fluid outside the tube at the local shell side fluid bulk temperature, lb/ft^3 (For two phase fluids, use two phase density.)

d_o = Outside diameter of tube, inches

For integrally finned tubes:

d_o = Fin root diameter, inches

FIGURE V-7.11

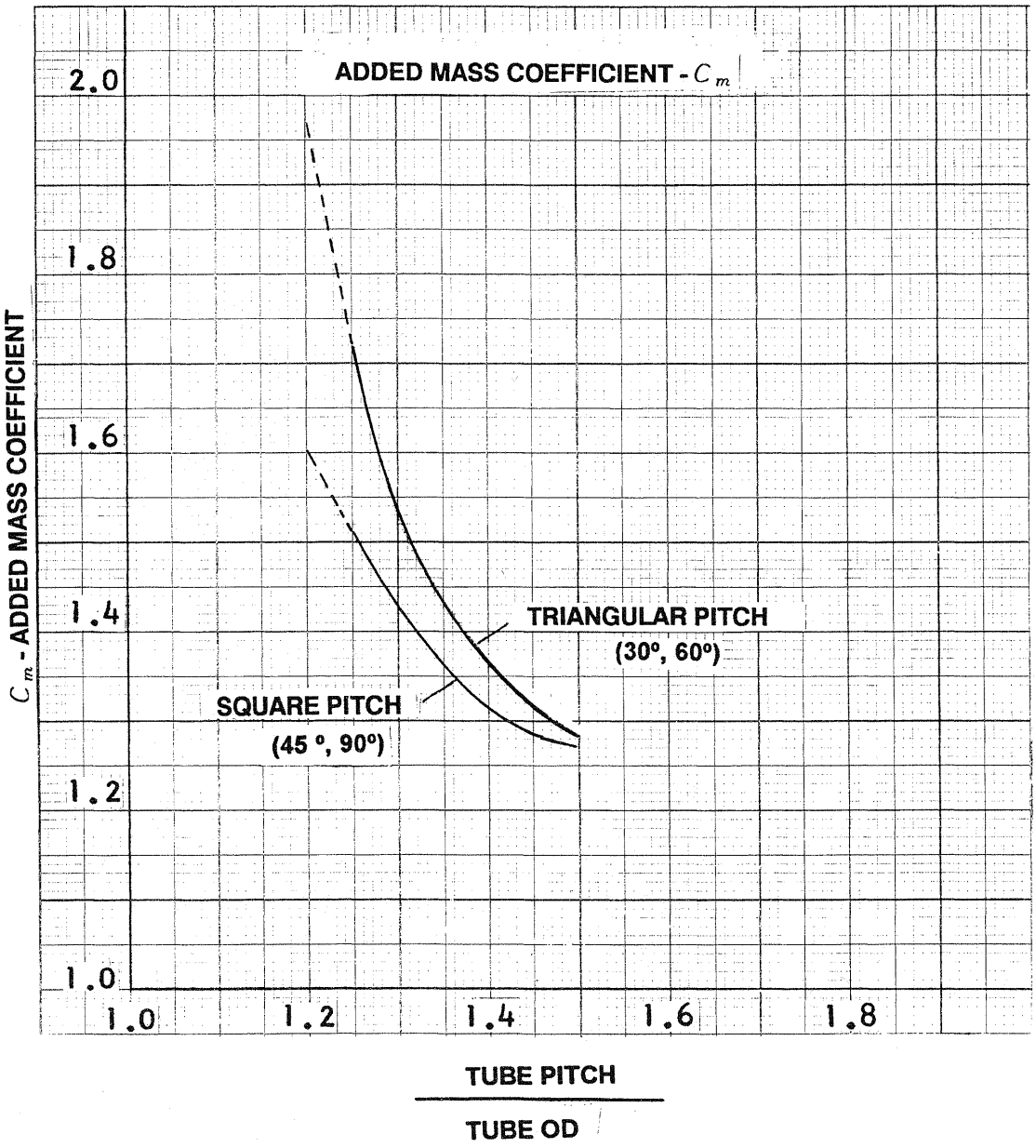
ADDED MASS COEFFICIENT - C_m
2.0
1.8
1.6
1.4
1.2
1.0
C_m - ADDED MASS COEFFICIENT
TRIANGULAR PITCH
(30°, 60°)
SQUARE PITCH
(45 °, 90°)
1.0
1.2
1.4
1.6
1.8
TUBE PITCH
TUBE OD

V-8 DAMPING

The mechanisms involved in damping are numerous, and the various effects are not readily measured or quantified. The following expressions for logarithmic decrement, δ_T, are based strictly on experimental observations and idealized models.

For shell side liquids, δ_T is equal to the greater of δ_1 or δ_2.

$$\delta_1 = \frac{3.41\, d_0}{w_0 f_n} \qquad \text{or} \qquad \delta_2 = \frac{0.012\, d_0}{w_0}\left[\frac{\rho_0 \mu}{f_n}\right]^{\frac{1}{2}}$$

where

μ = Shell side liquid viscosity, at the local shell side liquid bulk temperature, centipoise

d_0 = Outside diameter of tube, inches. For integrally finned tubes,

d_0 = Fin root diameter, inches

ρ_0 = Density of shell side fluid at the local bulk temperature, lb/ft^3

f_n = Fundamental natural frequency of the tube span, cycles/sec

w_0 = Effective weight of the tube as defined in Paragraph V-7.1, lb/ft

For shell side vapors $\delta_T = \delta_V$ as follows:

$$\delta_V = 0.314\frac{N-1}{N}\left(\frac{t_b}{l}\right)^{\frac{1}{2}}$$

where

N = Number of spans

t_b = Baffle or support plate thickness, inches

l = Tube unsupported span, inches

For two phase shell side media

$$\delta_{TP} = 0.0022[f(\epsilon_g) f(s_T)\left(\frac{\rho_l d_o{}^2}{w_o}\right)(C_{FU})]$$

where

$f(\epsilon_g)$ = Void fraction function

$$= \frac{\epsilon_g}{0.4} \qquad \text{for} \quad \epsilon_g < 0.4$$

$$= 1 \qquad \text{for} \quad 0.4 \le \epsilon_g \le 0.7$$

$$= 1 - \left(\frac{\epsilon_g - 0.7}{0.3}\right) \qquad \text{for} \quad \epsilon_g > 0.7$$

$$\epsilon_g = \frac{V_g}{V_g + V_l}$$

V_g = Volume flowrate of gas, ft^3/sec

V_l = Volume flowrate of liquid, ft^3/sec

$f(s_T)$ = Surface tension function

$$= \frac{S_T}{S_{T70}}$$

S_T = Surface tension of shell side liquid at the local bulk temperature. (See Paragraph V-14, Reference (20))

S_{T70} = Surface tension of shell side liquid at ambient temperature. (See Paragraph V-14, Reference (20))

ρ_l = Density of shell side liquid at the local bulk temperature, lb/ft^3

ρ_g = Density of shell side gas at the local bulk temperature, lb/ft^3

d_o = Outside diameter of tube, inches. For integrally finned tubes, d_o = Fin root diameter, inches

w_o = Effective tube weight as defined in Paragraph V-7.1, lb/ft

Note: Use two phase density in the calculation for hydrodynamic mass

ρ_{TP} = Two phase density at local bulk temperature lb/ft^3

$= \rho_l(1 - \epsilon_g) + \rho_g \epsilon_g$

C_{FU} = Confinement function, see Table V-8

Total two phase damping

$$\delta_T = \delta_{TP} + \delta_2 + \delta_V$$

Note: Use two phase properties for density and hydrodynamic mass.

TABLE V-8
CONFINEMENT FUNCTION
C_{FU}

Tube Pitch / Tube OD	Triangular Pitch C_{FU}	Square Pitch C_{FU}
1.20	2.25	1.87
1.25	2.03	1.72
1.33	1.78	1.56
1.50	1.47	1.35

V-9 SHELL SIDE VELOCITY DISTRIBUTION

V-9.1 GENERAL

One of the most important and least predictable parameters of flow induced vibration is fluid velocity. To calculate the local fluid velocity at a particular point in the heat exchanger is a difficult task. Very complex flow patterns are present in a heat exchanger shell. Various amounts of fluid bypass the tube bundle or leak through clearances between baffles and shell, or tube and baffle tube holes. Until methods are developed to accurately calculate local fluid velocities, the designer may use average crossflow velocities based on available empirical methods.

V-9.2 REFERENCE CROSSFLOW VELOCITY

The crossflow velocity in the bundle varies from span to span, from row to row within a span, and from tube to tube within a row. The reference crossflow velocity is calculated for each region of interest (see Paragraph V-3) and is based on the average velocity across a representative tube row in that region.

The presence of pass partition lanes aligned in the crossflow direction, clearance between the bundle and the shell, tube-to-baffle hole annular clearances, etc. reduce the net flow rate of the shell side fluid in crossflow. This should be considered in computing the reference crossflow velocity.

V-9.21 REFERENCE CROSSFLOW VELOCITY CALCULATIONS

The following method of calculating a reference crossflow velocity takes into account fluid bypass and leakage which are related to heat exchanger geometry. The method is valid for single phase shell side fluid with single segmental baffles in TEMA E shells. Other methods may be used to evaluate reference crossflow velocities.

Reference crossflow velocity is given by:

$$V = \frac{(F_h)(W)}{(M)(a_x)(\rho_o)(3600)} \quad \text{, ft/sec}$$

V-9.211 CALCULATION OF CONSTANTS

The constants used in the calculation of the reference crossflow velocity are given by:

$$C_1 = \frac{D_1}{D_3}$$

$$C_2 = \frac{d_1 - d_o}{d_o}$$

$$C_3 = \frac{D_1 - D_2}{D_1}$$

$$f_1 = \frac{(C_1 - 1)^{3/2}}{(C_1)^{1/2}}$$

$$f_2 = \frac{C_2}{(C_1)^{3/2}}$$

$$f_3 = C_3(C_1)^{1/2}$$

$$C_a = 0.00674\left(\frac{P - d_o}{P}\right)$$

$$C_7 = C_4\left(\frac{P}{P - d_o}\right)^{3/2}$$

TABLE V-9.211A

	TUBE PATTERN (See Figure RCB-2.4)			
	30°	60°	90°	45°
C_4	1.26	1.09	1.26	0.90
C_5	0.82	0.61	0.66	0.56
C_6	1.48	1.28	1.38	1.17
m	0.85	0.87	0.93	0.80

TABLE V-9.211B

	C_8 vs cut-to-diameter ratio $\frac{h}{D_1}$								
$\frac{h}{D_1}$	0.10	0.15	0.20	0.25	0.30	0.35	0.40	0.45	0.50
C_8	0.94	0.90	0.85	0.80	0.74	0.68	0.62	0.54	0.49

Linear interpolation is permitted

$$A = C_5 C_8 \left(\frac{D_1}{l_3}\right)\left(\frac{d_0}{P}\right)^2\left(\frac{P}{P-d_0}\right)$$

$$E = C_6\left(\frac{P}{P-d_0}\right)\left(\frac{D_1}{l_3}\right)\left(1-\frac{h}{D_1}\right)$$

$$N_h = (f_1)(C_7)+(f_2)(A)+(f_3)(E)$$

$$F_h = \frac{1}{1+(N_h)\left(\frac{D_1}{P}\right)^{1/2}}$$

$$M_w = (m)(C_1)^{1/2}$$

$$M = \left[\frac{1}{1+\frac{0.70(l_3)}{D_1}\left[\frac{1}{(M_w)^{0.6}}-1\right]}\right]^{1.67}$$

$$a_\chi = (l_3)(D_3)(C_a)$$

where

D_1 = Shell inside diameter, inches

D_2 = Baffle diameter, inches

D_3 = Outer tube limit (OTL), inches

d_1 = Tube hole diameter in baffle, inches

d_o = Outside diameter of tube, inches

For integrally finned tubes:

d_o = Fin outside diameter, inches

P = Tube pitch, inches

l_3 = Baffle spacing, inches

ρ_o = Density of shell side fluid at the local bulk temperature, lb/ft^3

W = Shell fluid flow rate, lb/hr

h = Height from baffle cut to shell inside diameter, inches

V-9.3 SEAL STRIPS

Seal strips are often used to help block the circumferential bypass space between a tube bundle and shell, or other bypass lanes. Seal strips force fluid from the bypass stream back into the bundle. This increases the reference crossflow velocity and should be considered in a vibration analysis.

Local fluid velocity in the vicinity of seal strips may be significantly higher than the average crossflow velocity. (See Paragraph V-14, Reference 6.)

V-9.31 REFERENCE CROSSFLOW VELOCITY WITH SEAL STRIPS

The reference crossflow velocity is calculated by using a modified value for C_1 in the equations in Paragraph V-9.211.

$$C_1 = 1 + \left[\frac{\left(\frac{D_1}{D_3}\right) - 1}{4} \right] + (1.5)(C_3)$$

V-9.4 PASS LANES PARALLEL TO FLOW

When pass lanes are oriented parallel to flow (at 90° to the baffle cut) they create a relatively low resistance path for fluid to follow. The net effect is for less fluid to cross the tube bundle, resulting in a lower average crossflow velocity. However, tubes adjacent to these lanes may be subjected to high local velocities. The number and width of these lanes should be considered when the reference crossflow velocity is calculated.

V-9.41 REFERENCE CROSSFLOW VELOCITY WITH PASS LANES PARALLEL TO FLOW

To account for pass lanes parallel to flow, if they are not blocked by some type of special baffle, a modified value of D_3 can be used

where

D_3 = Outer tube limit minus (number of parallel pass lanes x width of pass lanes), inches

V-9.5 BUNDLE ENTRANCE REGION AND IMPINGEMENT PLATES

Tubes directly beneath inlet nozzles and impingement plates can be subjected to local fluid velocities greater than those in other parts of the bundle. A number of documented vibration problems have been caused by high inlet fluid velocities. These standards provide guidelines for maximum velocity in this region and set criteria for the use of impingement plates. The ρV^2 limits in Paragraph RCB-4.6 are furnished for protection against tube erosion, but do not necessarily prevent vibration damage.

V-9.6 INTEGRALLY FINNED TUBES

In computing the reference crossflow velocity, the presence of fins shall be taken into account. For the purposes of using the equations in Paragraph V-9.2 to calculate a reference crossflow velocity, the fin diameter should be used in place of the nominal tube OD for integrally finned tubes.

V-10 ESTIMATE OF CRITICAL FLOW VELOCITY

The critical flow velocity, V_c, for a tube span is the minimum cross-flow velocity at which that span may vibrate with unacceptably large amplitudes. The critical flow velocity for tube spans in the window, overlap, inlet and outlet regions, U-bends, and all atypical locations should be calculated. The critical velocity, V_c, is defined by:

$$V_c = \frac{D f_n d_o}{12} \quad \text{, ft/sec}$$

where

D = Value obtained from Table V-10.1

f_n = Fundamental natural frequency, cycles/sec (see Paragraph V-5.3)

d_o = Outside diameter of tube, inches

For integrally finned tubes:

d_o = Fin root diameter, inches

The user should ensure that the reference crossflow velocity V, at every location, is less than V_c for that location.

TABLE V-10.1

FORMULAE FOR CRITICAL FLOW VELOCITY FACTOR, D

Tube Pattern (See Figure RCB-2.4)	Parameter Range for X	Dimensionless Critical Flow Velocity Factor, D
30°	0.1 to 1	$8.86\left(\frac{P}{d_o}-0.9\right)x^{0.34}$
	over 1 to 300	$8.86\left(\frac{P}{d_o}-0.9\right)x^{0.5}$
60°	0.01 to 1	$2.80x^{0.17}$
	over 1 to 300	$2.80x^{0.5}$
90°	0.03 to 0.7	$2.10x^{0.15}$
	over 0.7 to 300	$2.35x^{0.5}$
45°	0.1 to 300	$4.13\left(\frac{P}{d_o}-0.5\right)x^{0.5}$

P = Tube pitch, inches

d_o = Tube OD or fin root diameter for integrally finned tubes, inches

$x = \frac{144 w_o \delta_T}{\rho_o d_o^{\,2}}$ = Fluid elastic parameter

where

ρ_o = Shell side fluid density at the corresponding local shell side bulk temperature, lb/ft^3

δ_T = Logarithmic decrement (See Paragraph V-8)

w_o = Effective weight of the tube per unit length, lb/ft (See Paragraph V-7.1)

V-11 VIBRATION AMPLITUDE

V-11.1 GENERAL

There are four basic flow induced vibration mechanisms that can occur in a tube bundle. These are the fluidelastic instability, vortex shedding, turbulent buffeting, and acoustic resonance. The first three mechanisms are accompanied by a tube vibration amplitude while acoustic resonance causes a loud acoustic noise with virtually no increase in tube amplitude.

Fluidelastic instability is the most damaging in that it results in extremely large amplitudes of vibration with ultimate damage patterns as described in Paragraph V-2. The design approach in this case is to avoid the fluidelastic instability situation thereby avoiding the accompanying large amplitude of vibration (see Paragraph V-10). Vortex shedding may be a problem when there is a frequency match with the natural frequency of the tube. Vibration due to vortex shedding is expected when $f_n < 2f_{vs}$, where $f_{vs} = 12SV/d_o$ (see Paragraph V-12.2). Only then should the amplitude be calculated. This frequency match may result in a vibration amplitude which can be damaging to tubes in the vicinity of the shell inlet and outlet connections. Vortex shedding degenerates into broad band turbulence and both mechanisms are intertwined deep inside the bundle. Vortex shedding and turbulent buffeting vibration amplitudes are tolerable within specified limits. Estimation of amplitude and respective limits are shown below.

V-11.2 VORTEX SHEDDING AMPLITUDE

$$y_{vs} = \frac{C_L \rho_o d_o V^2}{2\pi^2 \delta_T f_n^2 w_o}$$

where

y_{vs} = Peak amplitude of vibration at midspan for the first mode, for single phase fluids, inches

C_L = Lift coefficient for vortex shedding, (see Table V-11.2)

ρ_0 = Density of fluid outside the tube at the local shell side fluid bulk temperature, lb/ft^3

d_0 = Outside diameter of tube, inches
For integrally finned tubes, d_0 = fin root diameter, inches

V = Reference crossflow velocity, ft/sec (see Paragraph V-9.2)

δ_T = Logarithmic decrement (see Paragraph V-8)

f_n = Fundamental natural frequency of the tube span, cycles/sec (see Paragraph V-5.3)

w_0 = Effective tube weight per unit length of tube, lb/ft (see Paragraph V-7.1)

V-11.21 RECOMMENDED MAXIMUM AMPLITUDE

$$y_{vs} \le 0.02 d_o \text{, inches}$$

V-11.3 TURBULENT BUFFETING AMPLITUDE

$$y_{tB} = \frac{C_F \rho_o d_o V^2}{8\pi \delta_T^{1/2} f_n^{3/2} w_o}$$

where

y_{tB} = Maximum amplitude of vibration for single phase fluids, inches

C_F = Force coefficient (see Table V-11.3)

V-11.31 RECOMMENDED MAXIMUM AMPLITUDE

$$y_{tB} \le 0.02 d_o \text{, inches}$$

TABLE V-11.2
LIFT COEFFICIENTS
C_L

$\frac{P}{d_o}$	TUBE PATTERN (See Figure RCB-2.4)			
	30°	60°	90°	45°
1.20	0.090	0.090	0.070	0.070
1.25	0.091	0.091	0.070	0.070
1.33	0.065	0.017	0.070	0.010
1.50	0.025	0.047	0.068	0.049

TABLE V-11.3
FORCE COEFFICENTS
C_F

Location	f_n	C_F
Bundle Entrance Tubes	≤ 40	0.022
	$> 40 < 88$	$-0.00045 f_n + 0.04$
	≥ 88	0
Interior Tubes	≤ 40	0.012
	$> 40 < 88$	$-0.00025 f_n + 0.022$
	≥ 88	0

V-12 ACOUSTIC VIBRATION

Acoustic resonance is due to a gas column oscillation. Gas column oscillation can be excited by phased vortex shedding or turbulent buffeting. Oscillation normally occurs perpendicular to both the tube axis and flow direction. When the natural acoustic frequency of the shell approaches the exciting frequency of the tubes, a coupling may occur and kinetic energy in the flow stream is converted into acoustic pressure waves. Acoustic resonance may occur independently of mechanical tube vibration.

V-12.1 ACOUSTIC FREQUENCY OF SHELL

Acoustic frequency is given by:

$$f_a = \frac{409}{w}\left(\frac{P_s \gamma}{\rho_o\left(1+\frac{0.5}{x_t x_l}\right)}\right)^{1/2} i \quad \text{, cycles/sec}$$

where

w = Distance between reflecting walls measured parallel to segmental baffle cut, inches

P_s = Operating shell side pressure, psia

γ = Specific heat ratio of shell side gas, dimensionless

ρ_o = Shell side fluid density at local fluid bulk temperature, lb/ft^3

$$x_l = \frac{p_l}{d_o}$$

$$x_t = \frac{p_t}{d_o}$$

p_l = Longitudinal pitch, inches (see Figures V-12.2A and V-12.2B)

p_t = Transverse pitch, inches (see Figures V-12.2A and V-12.2B)

d_0 = Outside diameter of tube, inches. For integrally finned tubes, d_o = Fin outer diameter, inches

i = mode (1, 2, 3, 4)

V-12.2 VORTEX SHEDDING FREQUENCY

The vortex shedding frequency is given by:

$$f_{vs} = \frac{12SV}{d_0} \quad \text{, cycles/sec}$$

where

V = Reference crossflow velocity, ft/sec (see Paragraph V-9.2)

S = Strouhal number (see Figures V-12.2A and V-12.2B)

d_0 = Outside diameter of tube, inches

For integrally finned tubes:

d_0 = Fin outer diameter, inches

V-12.3 TURBULENT BUFFETING FREQUENCY

The turbulent buffeting frequency is given by:

$$f_{tb} = \frac{12V}{d_0 x_l x_t}\left[3.05\left(1 - \frac{1}{x_t}\right)^2 + 0.28\right], \text{ cycles/sec}$$

where

d_0 = Outside diameter of tube, inches

For integrally finned tubes:

d_0 = Fin outer diameter, inches

$$x_t = \frac{p_t}{d_0}$$

$$x_l = \frac{p_l}{d_0}$$

p_l = Longitudinal pitch, inches (see Figures V-12.2A and V-12.2B)

p_t = Transverse pitch, inches (see Figures V-12.2A and V-12.2B)

V = Reference crossflow velocity, ft/sec (see Paragraph V-9.2)

V-12.4 ACOUSTIC RESONANCE

Incidence of acoustic resonance is possible if any one of the following conditions is satisfied at any operating condition.

V-12.41 CONDITION A PARAMETER

$$0.8 f_{vs} < f_a < 1.2 f_{vs}$$

or

$$0.8 f_{tb} < f_a < 1.2 f_{tb}$$

V-12.42 CONDITION B PARAMETER

$$V > \frac{f_a d_0 (x_l - 0.5)}{6}$$

V-12.43 CONDITION C PARAMETER

$$V > \frac{f_a d_0}{12S}$$

and

$$\frac{R_e}{S x_t}\left(1 - \frac{1}{x_0}\right)^2 > 2000$$

where

$x_0 = x_l$ for 90° tube patterns

$x_0 = 2x_l$ for 30°, 45°, and 60° tube patterns

f_a = Acoustic frequency, cycles/sec (see Paragraph V-12.1)

S = Strouhal number (see Figures V-12.2A and V-12.2B)

R_e = Reynolds number, evaluated at the reference cross flow velocity

$$R_e = \frac{124.13 d_o V \rho_o}{\mu}$$

μ = Shellside fluid viscosity, centipoise

V-12.5 CORRECTIVE ACTION

There are several means available to correct a resonant condition, but most could have some effect on exchanger performance. The simplest method is to install deresonating baffle(s) in the exchanger bundle to break the wave(s) at or near the antinode(s). This can be done without significantly affecting the shell side flow pattern. In shell and tube exchangers, the standing wave forms are limited to the first or the second mode. Failure to check both modes can result in acoustic resonance, even with deresonating baffles.

FIGURE V-12.2A
STROUHAL NUMBER FOR 90 ° TUBE PATTERNS

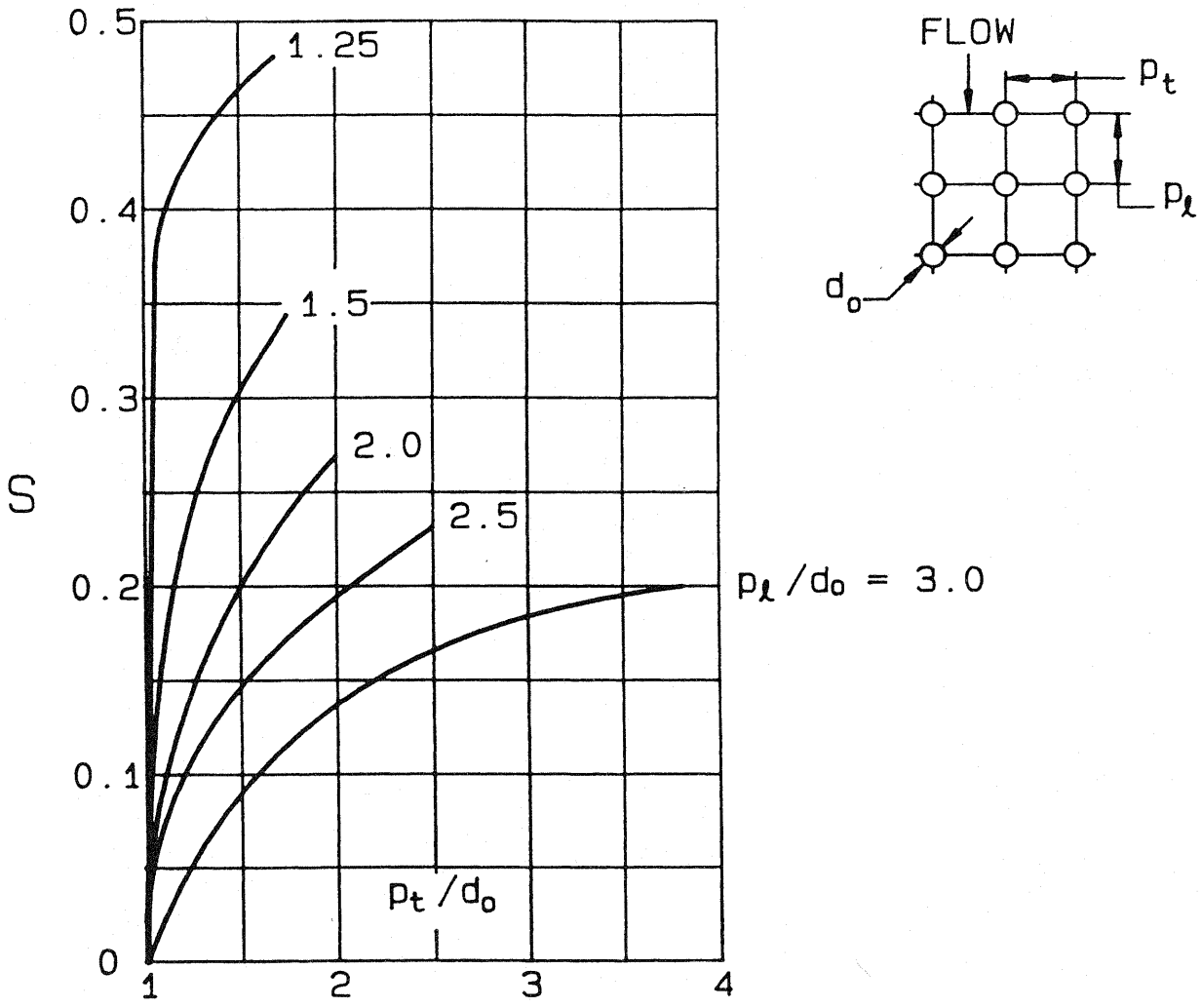

FIGURE V-12.2B
STROUHAL NUMBER FOR 30°, 45° AND 60° TUBE PATTERNS

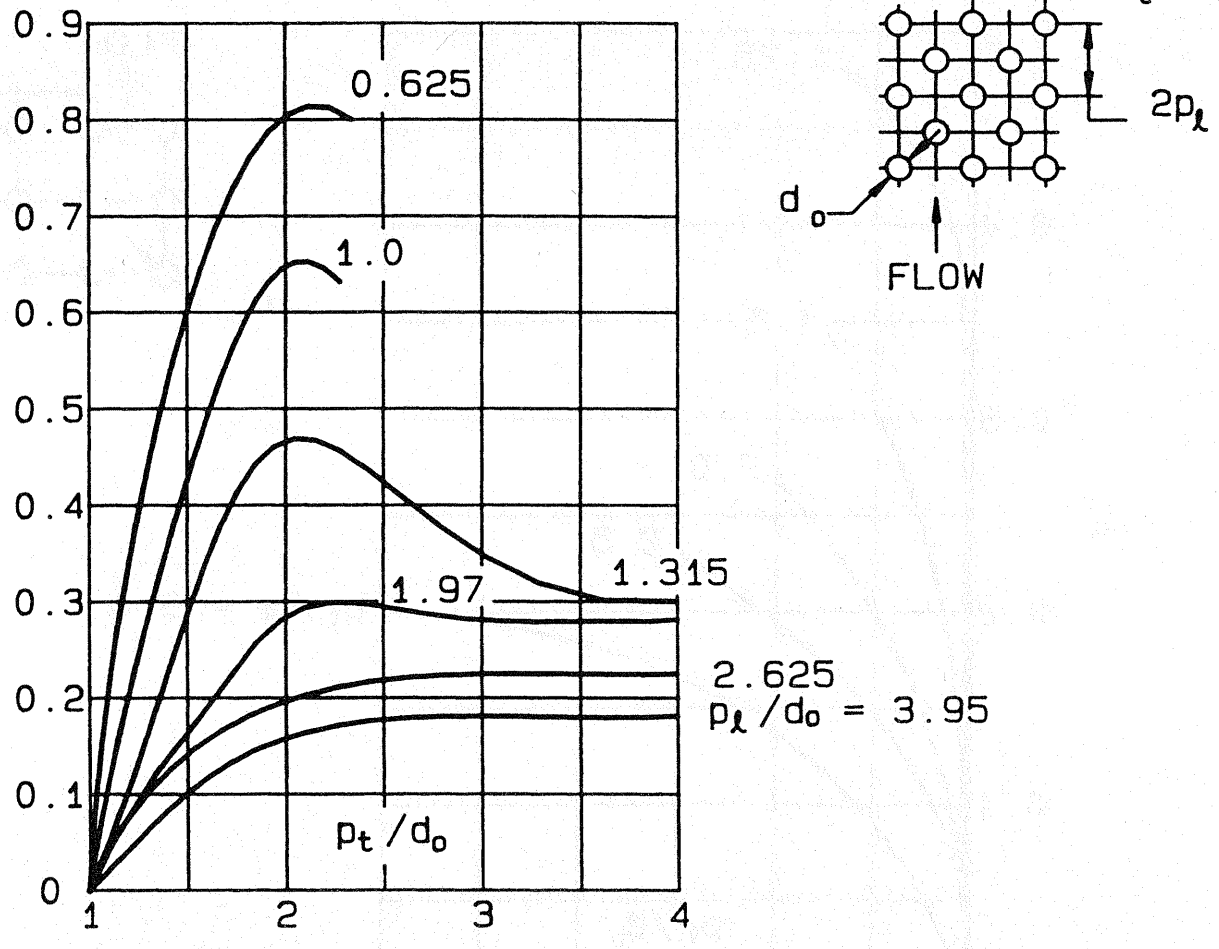

V-13 DESIGN CONSIDERATIONS

Many parameters acting independently or in conjunction with each other can affect the flow induced vibration analysis. One must be cognizant of these parameters and their effects should be accounted for in the overall heat exchanger design.

V-13.1 TUBE DIAMETER

Use of the largest reasonable tube diameter consistent with practical thermal and hydraulic design economics is desirable. Larger diameters increase the moment of inertia, thereby effectively increasing the stiffness of the tube for a given length.

V-13.2 UNSUPPORTED TUBE SPAN

The unsupported tube span is the most significant factor affecting induced vibrations. The shorter the tube span, the greater its resistance to vibration.

The thermal and hydraulic design of an exchanger is significant in determining the type of shell, baffle design and the unsupported tube length. For example, compared to single pass shells, a divided flow shell will result in approximately one-half the span length for an equal crossflow velocity. TEMA type X shells provide the opportunity to use multiple support plates to reduce the unsupported tube span, without appreciably affecting the crossflow velocity.

Compared to the conventional segmental baffle flow arrangement, multi-segmental baffles significantly reduce the tube unsupported span for the same shell side flow rate and pressure drop.

"No tubes in window" flow arrangement baffles provide support to all tubes at all baffle locations and also permit the use of multiple intermediate supports without affecting the crossflow velocity while reducing the unsupported tube span.

V-13.3 TUBE PITCH

Larger pitch-to-tube diameter ratios provide increased ligament areas which result in a reduced crossflow velocity for a given unsupported tube span, or a reduced unsupported tube span for a given crossflow velocity.

The increased tube to tube spacing reduces the likelihood of mid-span collision damage and also decreases the hydrodynamic mass coefficient given in Figure V-7.11.

V-13.4 ENTRANCE/EXIT AREAS

Entrance and exit areas are generally recognized to be particularly susceptible to damage in vibration prone exchangers.

Entrance and exit velocities should be calculated and compared to critical velocities to avoid vibration of the spans in question. It should be noted that compliance with Paragraph RCB-4.62 alone is not enough to insure protection from flow induced vibration at the entrance/exit regions of the bundle.

Consideration may be given to the use of partial supports to reduce unsupported tube spans in the entrance/exit regions. Sufficient untubed space may have to be provided at the shell inlet/outlet connections to reduce entrance/exit velocities. Impingement plates should be sized and positioned so as not to overly restrict the area available for flow. The use of distribution belts can be an effective means of lowering entrance/exit velocities by allowing the shell side fluid to enter/exit the bundle at several locations.

V-13.5 U-BEND REGIONS

Susceptibility of U-bends to damaging vibration may be reduced by optimum location of adjacent baffles in the straight tube legs and/or use of a special bend support device. Consideration may also be given to protecting the bends from flow induced vibration by appropriately locating the shell connection and/or adjacent baffles.

V-13.6 TUBING MATERIAL AND THICKNESS

The natural frequency of an unsupported tube span is affected by the elastic modulus of the tube. High values of elastic moduli inherent in ferritic steels and austenitic stainless alloys provide greater resistance to vibratory flexing than materials such as aluminum and brass with relatively low elastic moduli. Tube metallurgy and wall thickness also affect the damping characteristic of the tube.

V-13.7 BAFFLE THICKNESS AND TUBE HOLE SIZE

Increasing the baffle thickness and reducing the tube-to-baffle hole clearance increases the system damping (see Paragraph V-8) and reduces the magnitude of the forces acting on the tube-to-baffle hole interface.

The formulae in this section do not quantitatively account for the effects of increasing the baffle thickness, or tightening of the baffle hole clearance.

V-13.8 OMISSION OF TUBES

Omission of tubes at predetermined critical locations within the bundle may be employed to reduce vibration potential. For instance, tubes located on baffle cut lines sometimes experience excessive damage in vibration prone units; therefore, selective removal of tubes along baffle cut lines may be advantageous.

V-13.9 TUBE AXIAL LOADING

The heat exchanger designer must recognize the potential adverse impact on vibration by compressive axial loading of tubes due to pressure and/or temperature conditions. This is particularly significant for tubes in single pass, fixed tubesheet exchangers where the hot fluid is in the tube side, and in all multiple tube pass fixed tubesheet exchangers. The use of an expansion joint in such cases may result in reduction of the tube compressive stress. (See Paragraph V-6.)

V-14 SELECTED REFERENCES

(1) Singh, K. P., and Soler, A. I., "Mechanical Design Of Heat Exchangers And Pressure Vessel Components", Arcturus Publishers, Cherry Hill, N.J., (1984)

(2) Paidoussis, M. P., "Flow Induced Vibration Of Cylindrical Structures: A Review Of The State-Of-The-Art", McGill University, Merl Report No. 82-1 (1982)

(3) Barrington, E. A., "Experience With Acoustic Vibrations In Tubular Exchangers", Chemical Engineering Progress, Vol. 69, No. 7 (1973)

(4) Barrington, E. A., "Cure Exchanger Acoustic Vibration", Hydrocarbon Processing, (July, 1978)

(5) Chen, S. S., and Chung, Ho, "Design Guide For Calculating Hydrodynamic Mass, Part I: Circular Cylindrical Structures", Argonne National Laboratory, Report No. ANL-CT-76-45

Chung, H., and Chen, S. S., "Design Guide For Calculating Hydrodynamic Mass, Part II: Noncircular Cylindrical Structures", Ibid, Report No. ANL-CT-78-49

(6) Kissel, J. H., "Flow Induced Vibration In A Heat Exchanger With Seal Strips", ASME HTD, Vol. 9 (1980)

(7) Chen, S. S., "Flow Induced Vibration Of Circular Cylindrical Structures", Argonne National Laboratory, Report No. ANL-CT-85-51

(8) Tinker, T., "General Discussion Of Heat Transfer", Institution Of Mechanical Engineers, pp 97-116, London (1951)

(9) Gorman, Daniel J., "Free Vibration Analysis Of Beams & Shafts", John Wiley & Sons, (1975)

(10) Pettigrew, M.J., Goyder, H.G.D., Qiao, Z. L., Axisa, F., "Damping of Multispan Heat Exchanger Tubes", Part 1: In Gases, Flow-Induced Vibration (1986), ASME PVP Vol. 104, (1986), pp 81-87

(11) Pettigrew, M.J., Taylor, C. E., Kim, B.S., "Vibration of Tube Bundles In Two-Phase Cross Flow: Part I - Hydrodynamic Mass and Damping", 1988 International Symposium on Flow-Induced Vibration and Noise - Volume 2, The Pressure Vessel and Piping Division - ASME, pp 79-103

(12) Connors, H.J., "Fluidelastic Vibration Of Tube Arrays Excited By Crossflow", Flow Induced Vibration In Heat Exchangers, ASME, New York (1970)

(13) Chen, S.S., "Design Guide For Calculating The Instability Flow Velocity Of Tube Arrays In Crossflow", Argonne National Laboratory, ANL-CT-81-40 (1981)

(14) Kissel, Joseph H., "Flow Induced Vibrations In Heat Exchangers - A Practical Look", Presented at the 13th National Heat Transfer Conference, Denver (1972)

(15) Moretti, P.M., And Lowery, R.L., "Hydrodynamic Inertia Coefficients For A Tube Surrounded By Rigid Tubes", ASME paper No. 75-PVR 47, Second National Congress On Pressure Vessel And Piping, San Francisco

(16) WRC Bulletin 389, dated February 1994

(17) Owen, P.R., "Buffeting Excitation Of Boiler Tube Vibration", Journal Of Mechanical Engineering Science, Vol. 7, 1965

(18) Byrce, W.B., Wharmsby, J.S. and Fitzpatrick, J., "Duct Acoustic Resonances Induced By Flow Over Coiled And Rectangular Heat Exchanger Test Banks Of Plain And Finned Tubes", Proc. BNES International Conference On Vibration In Nuclear Plants, Keswick, U.K. (1978)

(19) Chen, Y.N., "Flow Induced Vibration And Noise In Tube Bank Heat Exchangers Due To Von Karman Streets," Journal Of Engineering For Industry

(20) API, "Technical Data Book - Petroleum Refining", 1996

(Note: This section is not metricated.)

T-1 SCOPE AND BASIC RELATIONS

T-1.1 SCOPE

This section outlines the basic thermal relationships common to most tubular heat transfer equipment. Included are calculation procedures for determining mean temperature difference and overall heat transfer coefficient, and discussions of the cause and effect of fouling, and procedures for determining mean metal temperatures of shell and tubes. Recommendations for the calculation of shell side and tube side heat transfer film coefficients and pressure losses are considered to be outside the scope of these Standards. It should be noted, however, that many of the standard details and clearances can significantly affect thermal-hydraulic performance, especially on the shell side. Particularly relevant in this respect is the research conducted by the University of Delaware Engineering Experiment Station under the joint sponsorship of ASME, API, TEMA, and other interested organizations. The results are summarized in their "Bulletin No. 5 (1963) Final Report of the Cooperative Research Program on Shell and Tube Exchangers."

T-1.2 BASIC HEAT TRANSFER RELATION

$$A_o = \frac{Q}{U \Delta t_m}$$

where

A_o = Required effective outside heat transfer surface, ft^2

Q = Total heat to be transferred, BTU/hr

U = Overall heat transfer coefficient, referred to tube outside surface BTU/hr ft^2 ° F

Δt_m = Corrected mean temperature difference, ° F

T-1.3 DETERMINATION OF OVERALL HEAT TRANSFER COEFFICIENT

The overall heat transfer coefficient U, including fouling, shall be calculated as follows:

$$U = \frac{1}{\left[\left(\frac{1}{h_o} + r_o\right)\left(\frac{1}{E_f}\right) + r_w + r_i\left(\frac{A_o}{A_i}\right) + \frac{1}{h_i}\left(\frac{A_o}{A_i}\right)\right]}$$

where

U = Overall heat transfer coefficient (fouled)

h_o = Film coefficient of shell side fluid

h_i = Film coefficient of tube side fluid

r_o = Fouling resistance on outside surface of tubes

r_i = Fouling resistance on inside surface of tubes

r_w = Resistance of tube wall referred to outside surface of tube wall, including extended surface if present

$\frac{A_o}{A_i}$ = Ratio of outside to inside surface of tubing

E_f = Fin efficiency (where applicable)

The units of U, h_o and h_i are BTU/hr ft^2 ° F and the units of r_o, r_i and r_w are hr ft^2 ° F/BTU

T-1.4 TUBE WALL RESISTANCE

T-1.41 BARE TUBES

$$r_w = \frac{d}{24k}\left[ln\left(\frac{d}{d-2t}\right)\right]$$

T-1.42 INTEGRALLY FINNED TUBES

$$r_w = \frac{t}{12k}\frac{[d+2Nw(d+w)]}{(d-t)}$$

where

d = OD of bare tube or root diameter if integrally finned, inches

w = Fin height, inches

t = Tube wall thickness, inches

N = Number of fins per inch

k = Thermal conductivity, BTU/hr ft ° F

T-1.5 SELECTED REFERENCE BOOKS

(1) A. P. Fraas and M. N. Ozisik, "Heat Exchanger Design", John Wiley & Sons, 1965.

(2) M. Jacob, "Heat Transfer", Vol. 1, John Wiley & Sons, 1949.

(3) D. Q. Kern, "Process Heat Transfer", McGraw-Hill Book Co., 1950.

(4) J. G. Knudsen and D. L. Katz, "Fluid Dynamics and Heat Transfer", McGraw-Hill Book Co., 1958.

(5) W. H. McAdams, "Heat Transmission", McGraw-Hill Book Co., Third Ed., 1954.

(6) Chemical Engineers' Handbook, McGraw-Hill Book Co., Fifth Ed., 1973.

T-2 FOULING

T-2.1 TYPES OF FOULING

Several unique types of fouling mechanisms are currently recognized. They are individually complex, can occur independently or simultaneously, and their rates of development are governed by physical and chemical relationships dependent on operating conditions. The major fouling mechanisms are:

Precipitation fouling
Particulate fouling
Chemical reaction fouling
Corrosion fouling
Biological fouling

T-2.2 EFFECTS OF FOULING

The calculation of the overall heat transfer coefficient (see Paragraph T-1.3) contains the terms to account for the thermal resistances of the fouling layers on the inside and outside heat transfer surfaces. These fouling layers are known to increase in thickness with time as the heat exchanger is operated. Fouling layers normally have a lower thermal conductivity than the fluids or the tube material, thereby increasing the overall thermal resistance.

In order that heat exchangers shall have sufficient surface to maintain satisfactory performance in normal operation, with reasonable service time between cleanings, it is important in design to provide a fouling allowance appropriate to the expected operating and maintenance condition.

T-2.3 CONSIDERATIONS IN EVALUATING FOULING RESISTANCE

The determination of appropriate fouling resistance values involves both physical and economic factors, many of which vary from user to user, even for identical services. When these factors are known, they can be used to adjust typical base values tabulated in the RGP section of these standards.

T-2.31 PHYSICAL CONSIDERATIONS

Typical physical factors influencing the determination of fouling resistances are:

Fluid properties and the propensity for fouling
Heat exchanger geometry and orientation
Surface and fluid bulk temperatures
Local fluid velocities
Heat transfer process
Fluid treatment
Cathodic protection

T-2.32 ECONOMIC CONSIDERATIONS

Typical economic factors influencing the determination of appropriate fouling resistances are:

Frequency and amount of cleaning costs
Maintenance costs
Operating and production costs
Longer periods of time on stream
Fluid pumping costs
Depreciation rates
Tax rates
Initial cost and variation with size
Shut down costs
Out-of-service costs

T-2.4 DESIGN FOULING RESISTANCES

The best design fouling resistances, chosen with all physical and economic factors properly evaluated, will result in a minimum cost based on fixed charges of the initial investment (which increase with added fouling resistance) and on cleaning and down-time expenses (which decrease with added fouling resistance). By the very nature of the factors involved, the manufacturer is seldom in a position to determine optimum fouling resistances. The user, therefore, on the basis of past experience and current or projected costs, should specify the design fouling resistances for his particular services and operating conditions. In the absence of specific data for setting proper resistances as described in the previous paragraphs, the user may be guided by the values tabulated in the RGP section of these standards. In the case of inside surface fouling, these values must be multiplied by the outside/inside surface ratio, as indicated in Equation T-1.3.

T-3 FLUID TEMPERATURE RELATIONS

T-3.1 LOGARITHMIC MEAN TEMPERATURE DIFFERENCE

For cases of true countercurrent or cocurrent flow, the logarithmic mean temperature difference should be used if the following conditions substantially apply:

Constant overall heat transfer coefficient
Complete mixing within any shell cross pass or tube pass
The number of cross baffles is large
Constant flow rate and specific heat
Enthalpy is a linear function of temperature
Equal surface in each shell pass or tube pass
Negligible heat loss to surroundings or internally between passes

The following references contain relevant information on the above items:

(1) K. Gardner and J. Taborek, "Mean Temperature Difference - A Reappraisal", AIChE Journal, December, 1977

(2) A. N. Caglayan and P. Buthod, "Factors Correct Air-Cooler and S & T Exchanger LMTD", The Oil & Gas Journal, September 6, 1976

For cases where the above conditions do not apply, a stepwise calculation of temperature difference and heat transfer surface may be necessary.

Excessive fluid leakage through the clearance between the cross baffles and the shell or between a longitudinal baffle and the shell can significantly alter the axial temperature profile. This condition may result in significant degradation of the effective mean temperature difference. The following references may be used for further information on this subject:

(1) J. Fisher and R. O. Parker, "New Ideas on Heat Exchanger Design", Hydrocarbon Processing, Vol. 48, No. 7, July 1969

(2) J. W. Palen and J. Taborek, "Solution of Shellside Flow Pressure Drop and Heat Transfer by Stream Analysis", CEP Symposium No. 92, Vol. 65, 1969

T-3.2 CORRECTION FOR MULTIPASS FLOW

In multipass heat exchangers, where there is a combination of cocurrent and countercurrent flow in alternate passes, the mean temperature difference is less than the logarithmic mean calculated for countercurrent flow and greater than that based on cocurrent flow. The correct mean temperature difference may be evaluated as the product of the logarithmic mean for countercurrent flow and an LMTD correction factor, F. Figures T-3.2A to T-3.2M inclusive give values for F as a function of the heat capacity rate ratio R and the required temperature effectiveness P. These charts are based on the assumption that the conditions listed in Paragraph T-3.1 are applicable. Caution should be observed when applying F factors from these charts which lie on the steeply sloped portions of the curves. Such a situation indicates that thermal performance will be extremely sensitive to small changes in operating conditions and that performance prediction may be unreliable.

Pass configurations for Figures T-3.2A through T-3.2H are stream symmetric; therefore, t and T may be taken as the cold and hot fluid temperatures, respectively, regardless of passage through the tube side or shell side. For non-stream symmetric configurations represented by Figures T-3.2I through T-3.2M, t and T must be taken as the tube side and the shell side fluid temperatures, respectively.

The following references may be useful in determining values of F for various configurations and conditions.

Configuration	Reference
(1) General	W. M. Rohsenow and J. P. Hartnett, "Handbook of Heat Transfer", McGraw-Hill Book Co., 1972
(2) Three tube passes per shell pass	F. K. Fischer, "Ind. Engr. Chem.", Vol. 30, 377 (1938)
(3) Unequal size tube passes	K. A. Gardner, "Ind. Engr. Chem.", Vol. 33, 1215 (1941)
(4) Weighted MTD	D. L. Gulley, "Hydrocarbon Proc.", Vol. 45, 116 (1966)

T-3.3 TEMPERATURE EFFECTIVENESS

The temperature effectiveness of a heat exchanger is customarily defined as the ratio of the temperature change of the tube side stream to the difference between the two fluid inlet temperatures, thus:

$$P = \frac{(t_2 - t_1)}{(T_1 - t_1)}$$

where P is the effectiveness. Figures T-3.3A, T-3.3B, and T-3.3C show the temperature effectiveness of counterflow, single-pass shell and two-pass tube, and two-pass shell and four-pass tube exchangers respectively, in terms of overall heat transfer coefficient, surface, fluid flow rates, and specific heats.

In all cases, the lower case symbols (t_1, t_2, w and c) refer to the tube side fluid, and upper case (T_1, T_2, W and C) to the shell side fluid. (This distinction is not necessary in the case of counterflow exchangers, but confusion will be avoided if it is observed.) These charts are based on the same conditions listed in Paragraph T-3.1.

T-4 MEAN METAL TEMPERATURES OF SHELL AND TUBES

T-4.1 SCOPE

This paragraph outlines the basic method for determination of mean shell and tube metal temperatures. These temperatures have a pronounced influence in the design of fixed tubesheet exchangers. Knowledge of mean metal temperatures is necessary for determining tubesheet thickness, shell and tube axial stress levels, and flexible shell element requirements. This paragraph provides the basis for determining the differential thermal expansion term, $\triangle L$, required for the calculation of equivalent differential expansion pressure, P_d (see Paragraph RCB-7.161).

T-4.2 DEFINITIONS

T-4.21 MEAN METAL TEMPERATURE

The mean metal temperature of either the shell or tubes is the temperature taken at the metal thickness midpoint averaged with respect to the exchanger tube length. For the case of integrally finned tubes, the temperature at the prime tube metal thickness midpoint applies. The fin metal temperature should not be weighted with the prime tube metal temperature.

T-4.22 FLUID AVERAGE TEMPERATURE

The shell or tube fluid average temperature is the bulk shell or tube fluid temperature averaged with respect to the exchanger tube length.

T-4.3 RELATIONSHIP BETWEEN MEAN METAL TEMPERATURES AND FLUID AVERAGE TEMPERATURES

T-4.31 SHELL MEAN METAL TEMPERATURE

The shell mean metal temperature, generally assumed to be equal to the shell fluid average temperature, is given by:

$$T_M = \overline{T}$$

where

T_M = Shell mean metal temperature, ° F

$\overline{T}$ = Shell fluid average temperature, ° F

This assumption is valid for cases without abnormal rates of heat transfer between the shell and its surroundings. If significant heat transfer to or from the shell could occur, determination of the effect on the shell metal temperature should be made. In general, most high or low temperature externally insulated exchangers and moderate temperature non-insulated exchangers meet the above assumption.

T-4.32 TUBE MEAN METAL TEMPERATURE

The tube mean metal temperature is dependent not only on the tube fluid average temperature, but also the shell fluid average temperature, the shell and tube heat transfer coefficients, shell and tube fouling resistances, and tube metal resistance to heat transfer, according to the following relationship:

$$t_M = \overline{T} - \left[\frac{\left(\frac{1}{h_o} + r_o\right)\left(\frac{1}{E_f}\right) + \frac{r_w}{2}}{\left(\frac{1}{h_o} + r_o\right)\left(\frac{1}{E_f}\right) + r_w + \left(r_i + \frac{1}{h_i}\right)\left(\frac{A_o}{A_i}\right)} \right] [\overline{T} - \bar{t}]$$

where

t_M = Tube mean metal temperature, ° F

$\bar{t}$ = Tube side fluid average temperature, ° F (see Paragraph T-4.4)

All other terms are as defined by Paragraphs T-1.3 and T-4.31.

T-4.33 TUBESHEET MEAN METAL TEMPERATURE

Untubed portion of tubesheet

$$T_{TS} = \frac{T_T + T_S}{2}$$

Tubed portion of tubesheet:

$$T_{TS} = T_T + (T_S - T_T)\frac{(\eta - F)}{(A/a)\left(1 + \eta\frac{h_T}{hs}\right)}$$

where:

T_T = Tubeside fluid temperature, ° F

T_S = Shellside fluid temperature, ° F

h_T = Tubeside heat transfer coefficient, BTU/Hr-ft^2 - ° F

h_S = Shellside heat transfer coefficient, BTU/Hr-ft^2 - ° F

$$\eta = \frac{A}{aK}\left[\frac{1 + \frac{A}{aK}\tanh(K)}{\frac{A}{aK} + \tanh(K)}\right]$$

$$K = \sqrt{\frac{A}{a}\frac{h_T L}{12k}}\text{, degrees}$$

where k = tubesheet metal thermal conductivity, BTU/Hr-ft ° F

L = tubesheet thickness, inches

$$F = \frac{1}{\cosh(K) + \frac{aK}{A}\sinh(K)}$$

for triangular pitch

$$A = \pi d L / 2$$

$$a = 0.433 P^2 - \pi d^2 / 8$$

for square pitch

$$A = \pi d L$$

$$a = P^2 - \pi d^2 / 4$$

where

d = tube ID, inches

P = tube pitch, inches

T-4.4 ESTIMATION OF SHELL AND TUBE FLUID AVERAGE TEMPERATURES

The methods presented in this paragraph are based on equipment operating under steady-state conditions.

T-4.41 GENERAL CONSIDERATIONS

Fluid average temperatures in shell and tube heat exchangers are affected by the following:

(1) Shell and tube fluid terminal temperatures

(2) Shell and tube fluid temperature profiles with respect to enthalpy (the following methods assume linear profiles)

(3) Variable heat transfer rates with respect to exchanger length (the following methods assume a constant heat transfer rate through the length of the unit)

(4) Heat exchanger geometry, specifically pass configuration, of the shell as well as the tubes

T-4.42 ISOTHERMAL SHELL FLUID/ISOTHERMAL TUBE FLUID, ALL PASS ARRANGEMENTS

$$\overline{T} = T_1 = T_2$$

$$\bar{t} = t_1 = t_2$$

where

T_1 = Shell side fluid inlet temperature, °F

T_2 = Shell side fluid outlet temperature, °F

t_1 = Tube side fluid inlet temperature, °F

t_2 = Tube side fluid outlet temperature, °F

T-4.43 ISOTHERMAL SHELL FLUID/LINEAR NONISOTHERMAL TUBE FLUID, ALL PASS ARRANGEMENTS

$$\overline{T} = T_1 = T_2$$

$$\bar{t} = \overline{T} \pm LMTD$$

T-4.44 LINEAR NONISOTHERMAL SHELL FLUID/ISOTHERMAL TUBE FLUID, ALL PASS ARRANGEMENTS

$$\bar{t} = t_1 = t_2$$

$$\overline{T} = \bar{t} \pm LMTD$$

T-4.45 LINEAR NONISOTHERMAL SHELL AND TUBE FLUIDS, TYPE "E" SHELL

The average shell fluid temperature may be determined from the following equation:

$$\overline{T} = T_1 - \left(\frac{1}{\alpha} + \frac{1}{1 - e^{\alpha}} \right) (T_1 - T_2)$$

The value of α depends on tube pass geometry and flow direction as given below:

Single pass tubes - cocurrent flow

$$\alpha = - \frac{|t_2 - t_1|}{LMTD_{co}} \left[\frac{T_1 - T_2}{t_2 - t_1} + 1 \right]$$

Single pass tubes - countercurrent flow

$$\alpha = - \frac{|t_2 - t_1|}{LMTD_{cnt}} \left[\frac{T_1 - T_2}{t_2 - t_1} - 1 \right]$$

For cases where $0.99 < \dfrac{(T_1 - T_2)}{(t_2 - t_1)} < 1.01$ use $\overline{T} = 0.5(T_1 + T_2)$

Even number of tube passes

$$\alpha = - \frac{|t_2 - t_1|}{LMTD_{cnt}} \left[\frac{T_1 - T_2}{t_2 - t_1} \right]$$

where

$LMTD_{co}$ = Cocurrent flow $LMTD$

$LMTD_{cnt}$ = Uncorrected countercurrent flow $LMTD$

t_1, t_2, T_1, T_2, are defined in Paragraph T-4.42

The average tube fluid temperature may then be determined from the following equation:

$$\bar{t} = \overline{T} \pm LMTD(F)$$

where

F = $LMTD$ Correction Factor

T-4.46 OTHER CASES

For cases involving nonlinear temperature-enthalpy profiles and/or pass geometries other than those given above, other methods must be used to establish mean metal temperatures. However, with the assumption of constant overall heat transfer rate, the following relationship always applies:

$$\overline{T} - \bar{t} = \pm LMTD(F)$$

If one fluid average temperature can be established accurately, knowing the effective mean temperature difference allows the other to be determined.

T-4.5 SELECTION OF THE DESIGN CASE

All foreseeable modes of operation should be considered when specifying the metal temperatures to be used for calculation of the equivalent differential expansion pressure. Consideration should be given to the following:

(1) Normal operation, as specified by purchaser, under fouled conditions at the design flow rates and terminal temperatures

(2) Operation at less than the design fouling allowance (under such conditions, the purchaser should supply details in regard to anticipated operating parameters)

Other operating conditions to which the equipment may be subjected, as specified by the purchaser, may include, but are not necessarily limited to:

(1) Alternate flow rates and/or terminal temperatures as may be the case during start-up, shutdown, variable plant loads, etc.

(2) Flow of a process fluid or clean fluid through one side, but not the other

The largest positive and negative values of equivalent differential expansion pressure generally correspond with the cases under which the largest positive and negative differential thermal growths occur; an exception being if varying values of material modulii of elasticity alter the comparison.

The differential thermal growth between the shell and tubes is determined as follows:

$$\Delta L = L_t(\alpha_s[T_M - 70] - \alpha_T[t_M - 70])$$

where

ΔL = Differential thermal growth between the shell and tubes, inches

L_t = Tube length, face-to-face of tubesheets, inches

α_s = Coefficient of thermal expansion of the shell, inches/inch/ ° F (see Table D-11)

α_T = Coefficient of thermal expansion of the tubes, inches/inch/ ° F (see Table D-11)

T-4.6 ADDITIONAL CONSIDERATIONS

T-4.61 SERIES ARRANGEMENTS

Individual exchangers in series arrangements are generally subjected to different temperature conditions. Each individual exchanger should be evaluated separately. Alternately, all could be designed for the most severe conditions in the series.

T-4.62 OTHER MODES OF OPERATION

If fixed tubesheet heat exchangers are to be operated under conditions differing from those for which the initial design was checked, it is the purchaser's responsibility to determine that such operation will not lead to a condition of overstress. This requires a full re-evaluation of required tubesheet thickness, shell and tube longitudinal stresses, tube-to-tubesheet joint loads, and flexible shell elements based on the new operating conditions.

FIGURE T-3.1

CHART FOR SOLVING LMTD FORMULA

$$LMTD = \frac{(GTTD - LTTD)}{ln\left(\frac{GTTD}{LTTD}\right)}$$

where GTTD = Greater Terminal Temperature Difference.
LTTD = Lesser Terminal Temperature Difference.

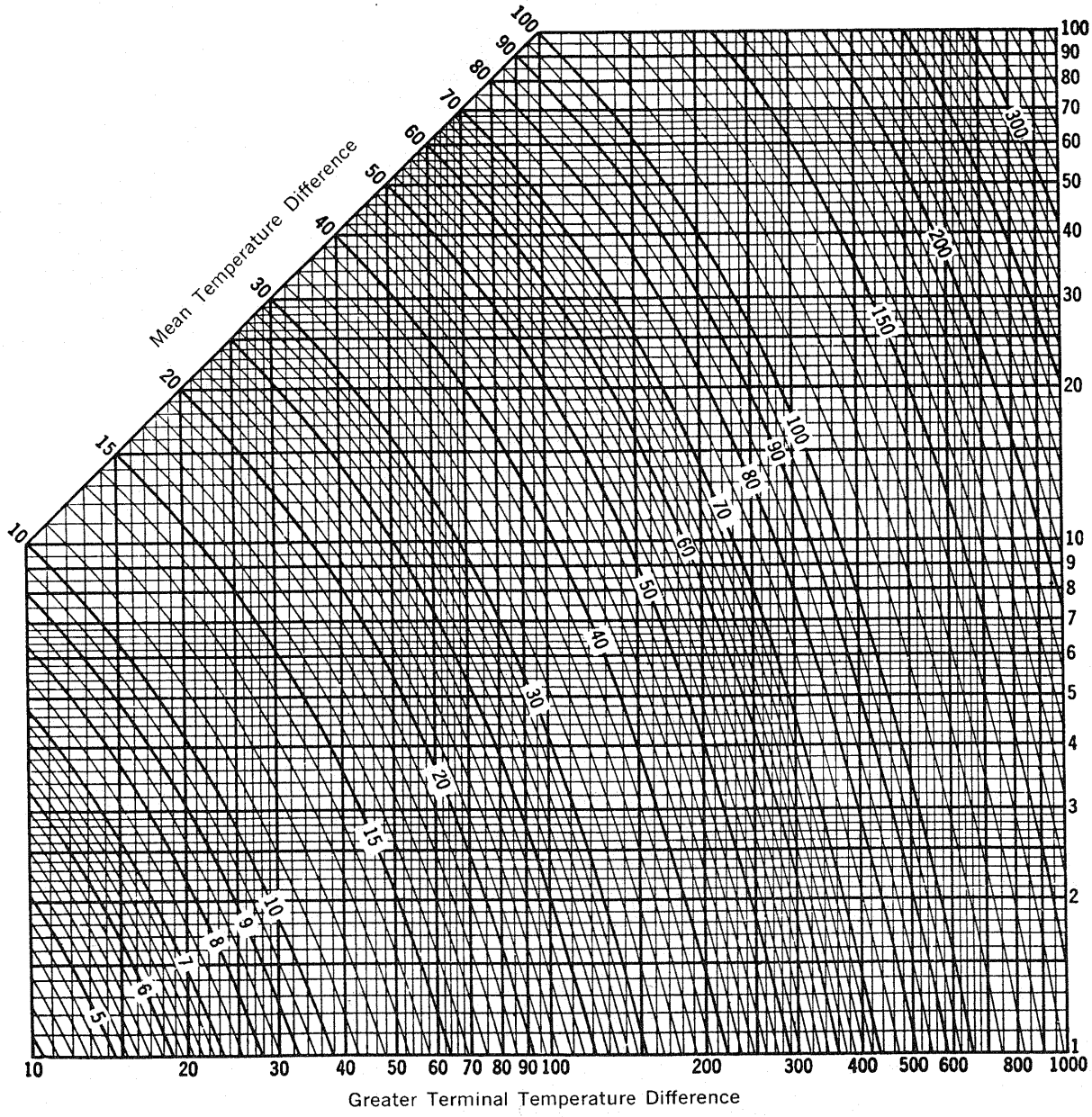

NOTE—For points not included on this sheet multiply Greater Terminal Temperature Difference and Lesser Terminal Temperature Differe by any multiple of 10 and divide resulting value of curved lines by same multiple.

FIGURE T-3.2A

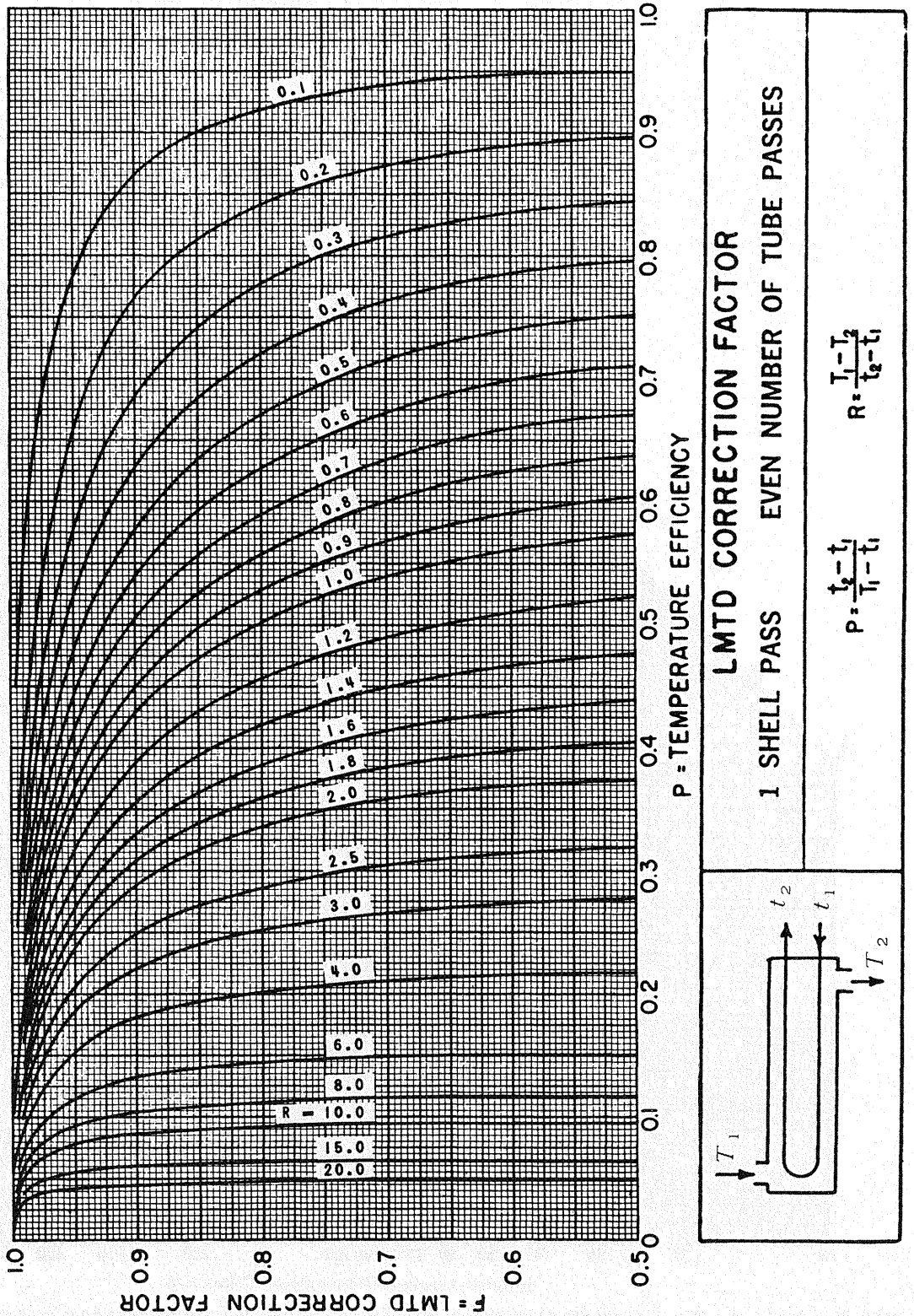
LMTD CORRECTION FACTOR
1 SHELL PASS EVEN NUMBER OF TUBE PASSES
$P = \frac{t_2 - t_1}{T_1 - t_1}$
$R = \frac{T_1 - T_2}{t_2 - t_1}$
T_1
t_2
t_1
T_2
P = TEMPERATURE EFFICIENCY
F = LMTD CORRECTION FACTOR
0.1
0.2
0.3
0.4
0.5
0.6
0.7
0.8
0.9
1.0
1.2
1.4
1.6
1.8
2.0
2.5
3.0
4.0
6.0
8.0
R = 10.0
15.0
20.0
0.5
0.6
0.7
0.8
0.9
1.0

FIGURE T-3.2B

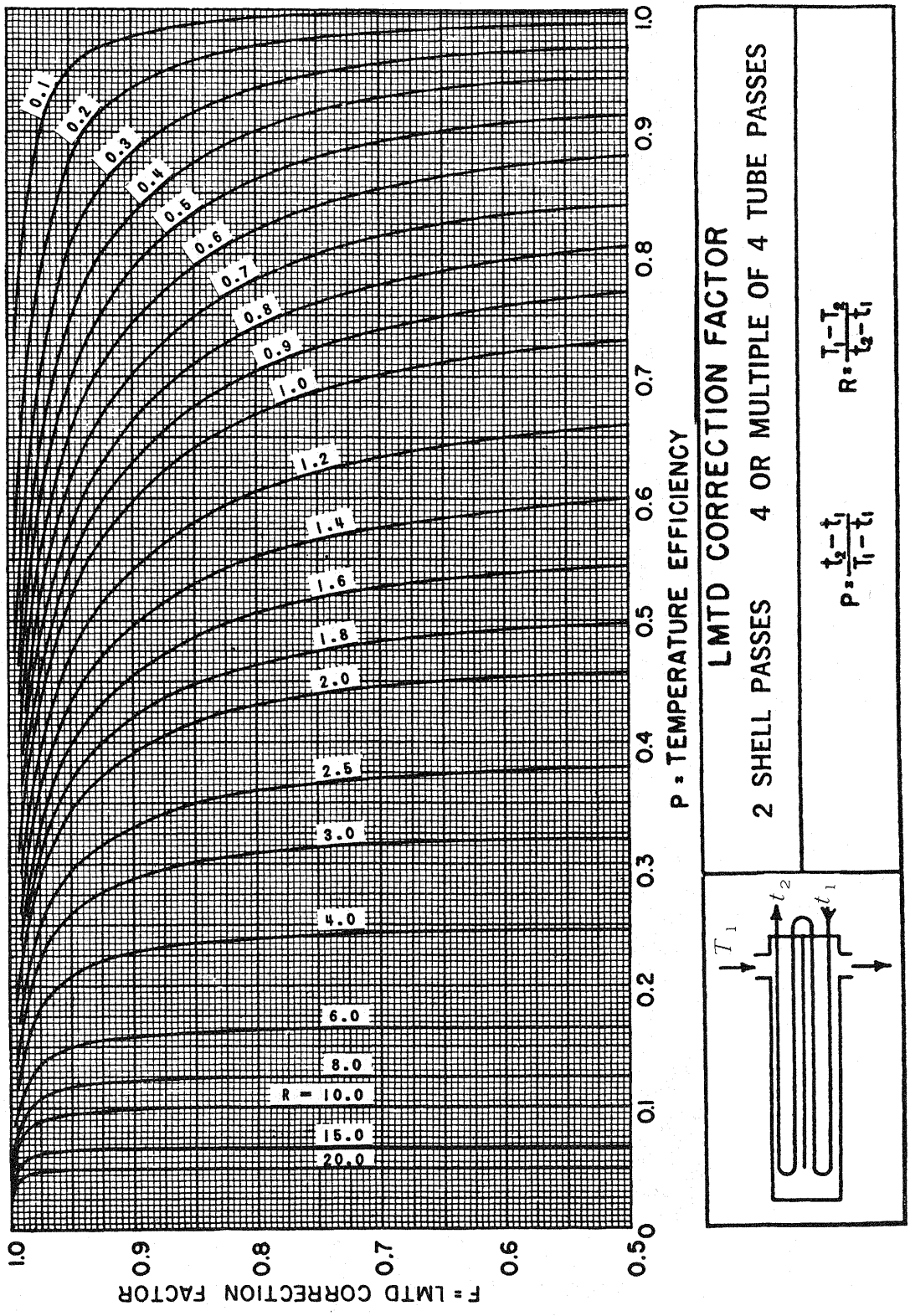
LMTD CORRECTION FACTOR
2 SHELL PASSES 4 OR MULTIPLE OF 4 TUBE PASSES
$P = \frac{t_2 - t_1}{T_1 - t_1}$
$R = \frac{T_1 - T_2}{t_2 - t_1}$
T_1
t_2
t_1
P = TEMPERATURE EFFICIENCY
F = LMTD CORRECTION FACTOR
0.1
0.2
0.3
0.4
0.5
0.6
0.7
0.8
0.9
1.0
1.2
1.4
1.6
1.8
2.0
2.5
3.0
4.0
6.0
8.0
R = 10.0
15.0
20.0
0.0
0.1
0.2
0.3
0.4
0.5
0.6
0.7
0.8
0.9
1.0

FIGURE T-3.2C

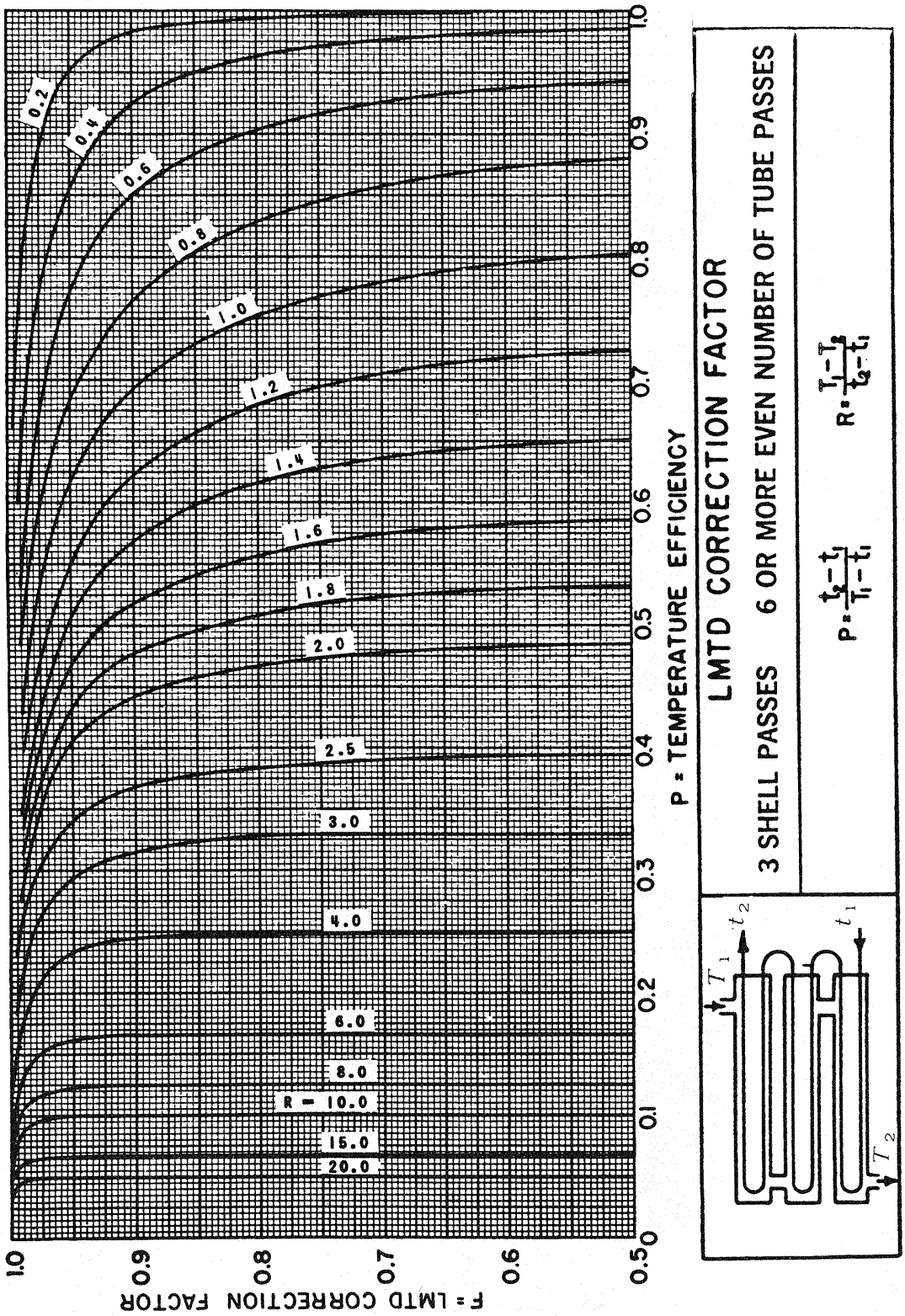
LMTD CORRECTION FACTOR
3 SHELL PASSES 6 OR MORE EVEN NUMBER OF TUBE PASSES
$P = \frac{t_2 - t_1}{T_1 - t_1}$
$R = \frac{T_1 - T_2}{t_2 - t_1}$
T_1
t_2
t_1
T_2
P = TEMPERATURE EFFICIENCY
F = LMTD CORRECTION FACTOR
0.2
0.4
0.6
0.8
1.0
1.2
1.4
1.6
1.8
2.0
2.5
3.0
4.0
6.0
8.0
R = 10.0
15.0
20.0
0.0
0.1
0.2
0.3
0.4
0.5
0.6
0.7
0.8
0.9
1.0

FIGURE T-3.2D

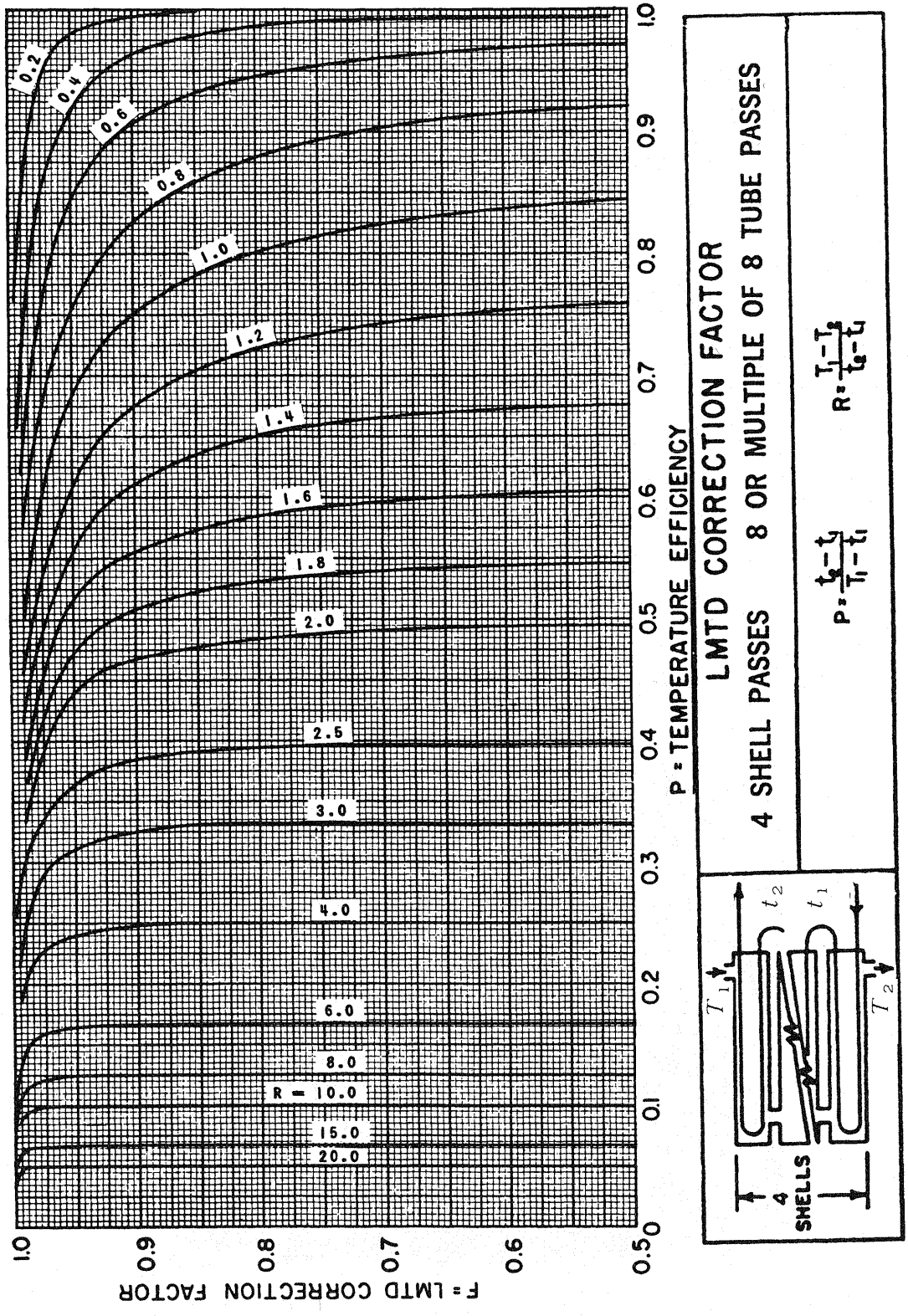
F = LMTD CORRECTION FACTOR
P = TEMPERATURE EFFICIENCY
1.0
0.9
0.8
0.7
0.6
0.5
0.4
0.3
0.2
0.1
0
0.2
0.4
0.6
0.8
1.0
1.2
1.4
1.6
1.8
2.0
2.5
3.0
4.0
6.0
8.0
R = 10.0
15.0
20.0
LMTD CORRECTION FACTOR
4 SHELL PASSES 8 OR MULTIPLE OF 8 TUBE PASSES
P = (t2 - t1) / (T1 - t1)
R = (T1 - T2) / (t2 - t1)
T1
t2
t1
T2
4 SHELLS

FIGURE T-3.2E

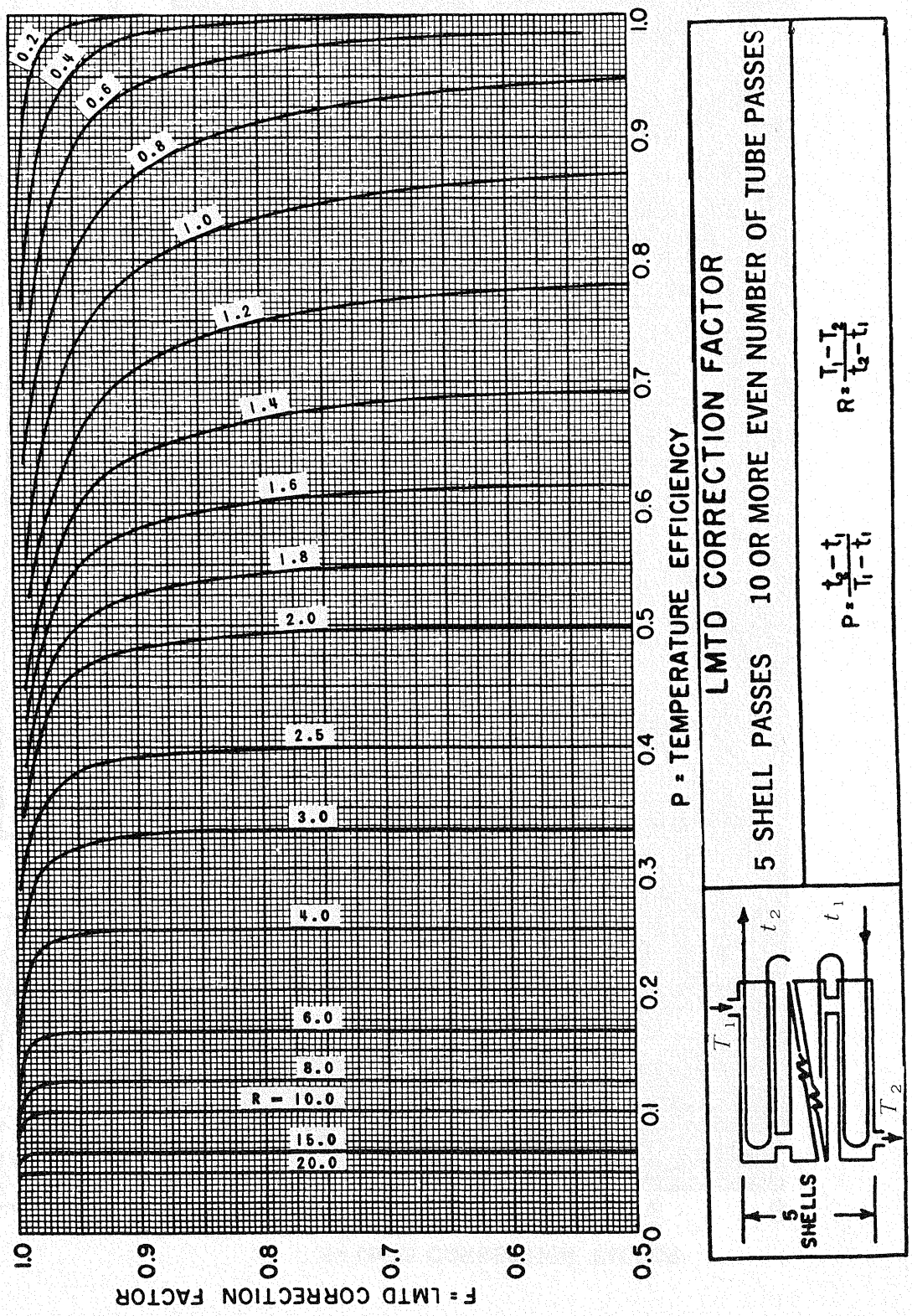
F = LMTD CORRECTION FACTOR
P = TEMPERATURE EFFICIENCY
0.2
0.4
0.6
0.8
1.0
1.2
1.4
1.6
1.8
2.0
2.5
3.0
4.0
6.0
8.0
R = 10.0
15.0
20.0
1.0
0.9
0.8
0.7
0.6
0.5
0.4
0.3
0.2
0.1
0
LMTD CORRECTION FACTOR
5 SHELL PASSES 10 OR MORE EVEN NUMBER OF TUBE PASSES
$P = \frac{t_2 - t_1}{T_1 - t_1}$
$R = \frac{T_1 - T_2}{t_2 - t_1}$
T_1
t_2
t_1
T_2
5 SHELLS

FIGURE T-3.2F

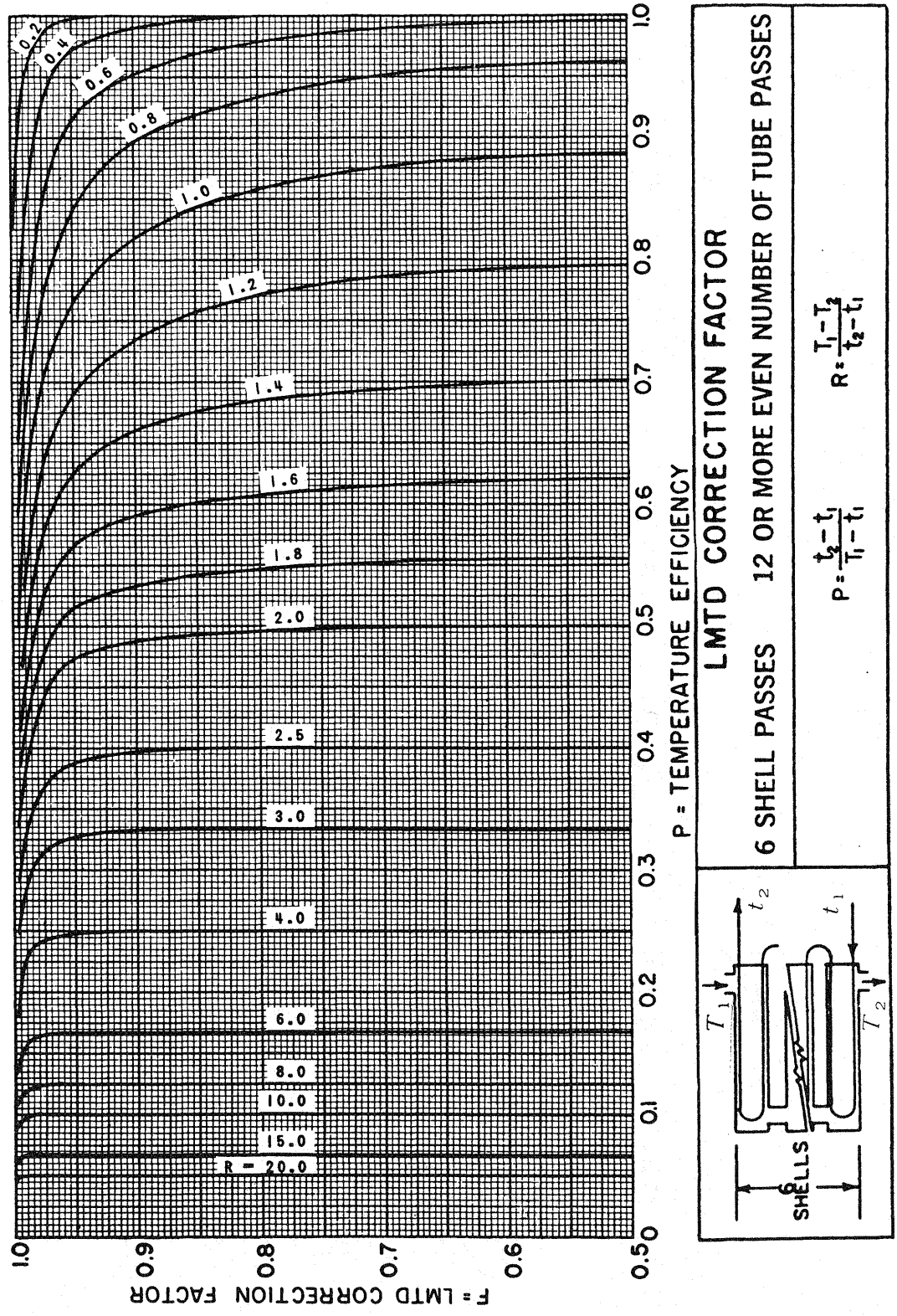
LMTD CORRECTION FACTOR
6 SHELL PASSES 12 OR MORE EVEN NUMBER OF TUBE PASSES
$P = \frac{t_2 - t_1}{T_1 - t_1}$ $R = \frac{T_1 - T_2}{t_2 - t_1}$
T_1
t_2
t_1
T_2
6 SHELLS
P = TEMPERATURE EFFICIENCY
F = LMTD CORRECTION FACTOR
0.2
0.4
0.6
0.8
1.0
1.2
1.4
1.6
1.8
2.0
2.5
3.0
4.0
6.0
8.0
10.0
15.0
R = 20.0
0.5
0.6
0.7
0.8
0.9
1.0

FIGURE T-3.2G

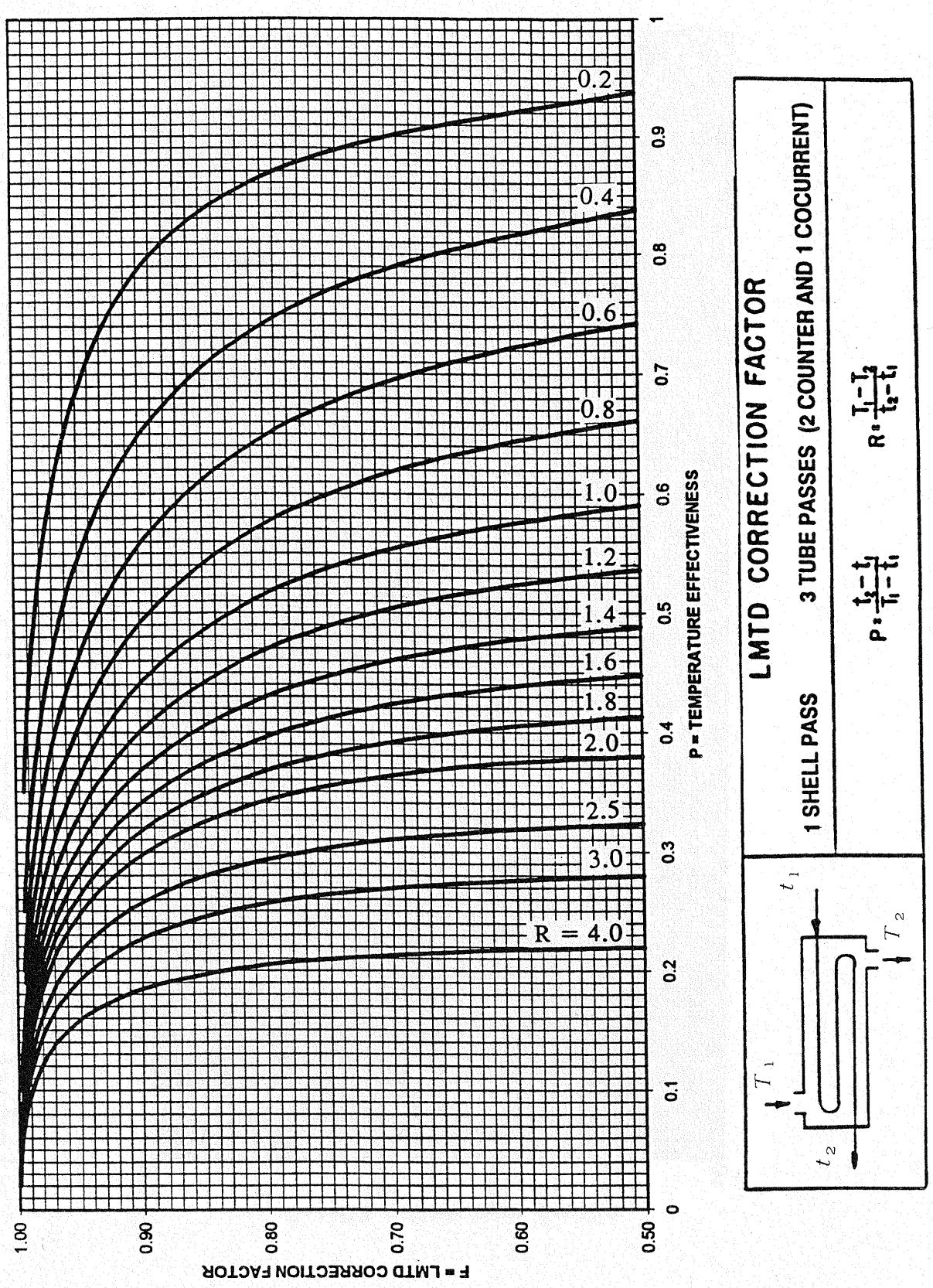
LMTD CORRECTION FACTOR
1 SHELL PASS
3 TUBE PASSES (2 COUNTER AND 1 COCURRENT)
$P = \frac{t_2 - t_1}{T_1 - t_1}$
$R = \frac{T_1 - T_2}{t_2 - t_1}$
T_1
t_1
t_2
T_2
0.2
0.4
0.6
0.8
1.0
1.2
1.4
1.6
1.8
2.0
2.5
3.0
R = 4.0
P = TEMPERATURE EFFECTIVENESS
F = LMTD CORRECTION FACTOR
0
0.1
0.2
0.3
0.4
0.5
0.6
0.7
0.8
0.9
1
1.00
0.90
0.80
0.70
0.60
0.50

FIGURE T-3.2H

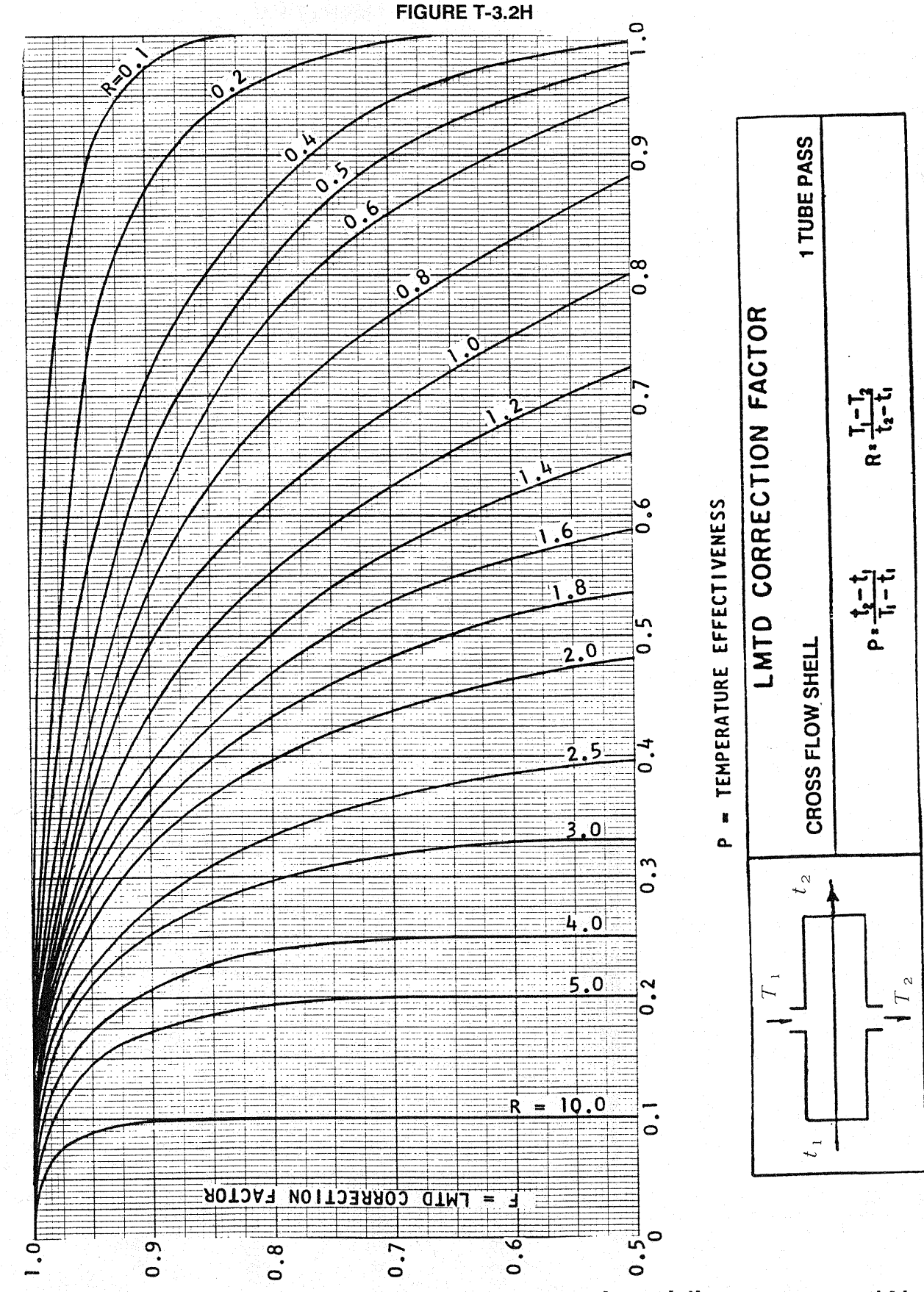
LMTD CORRECTION FACTOR
1 TUBE PASS
CROSS FLOW SHELL
$P = \frac{t_2 - t_1}{T_1 - t_1}$
$R = \frac{T_1 - T_2}{t_2 - t_1}$
T_1
T_2
t_2
t_1
P = TEMPERATURE EFFECTIVENESS
F = LMTD CORRECTION FACTOR
R=0.1
0.2
0.4
0.5
0.6
0.8
1.0
1.2
1.4
1.6
1.8
2.0
2.5
3.0
4.0
5.0
R = 10.0
1.0
0.9
0.8
0.7
0.6
0.5
0.4
0.3
0.2
0.1
0

FIGURE T-3.2I

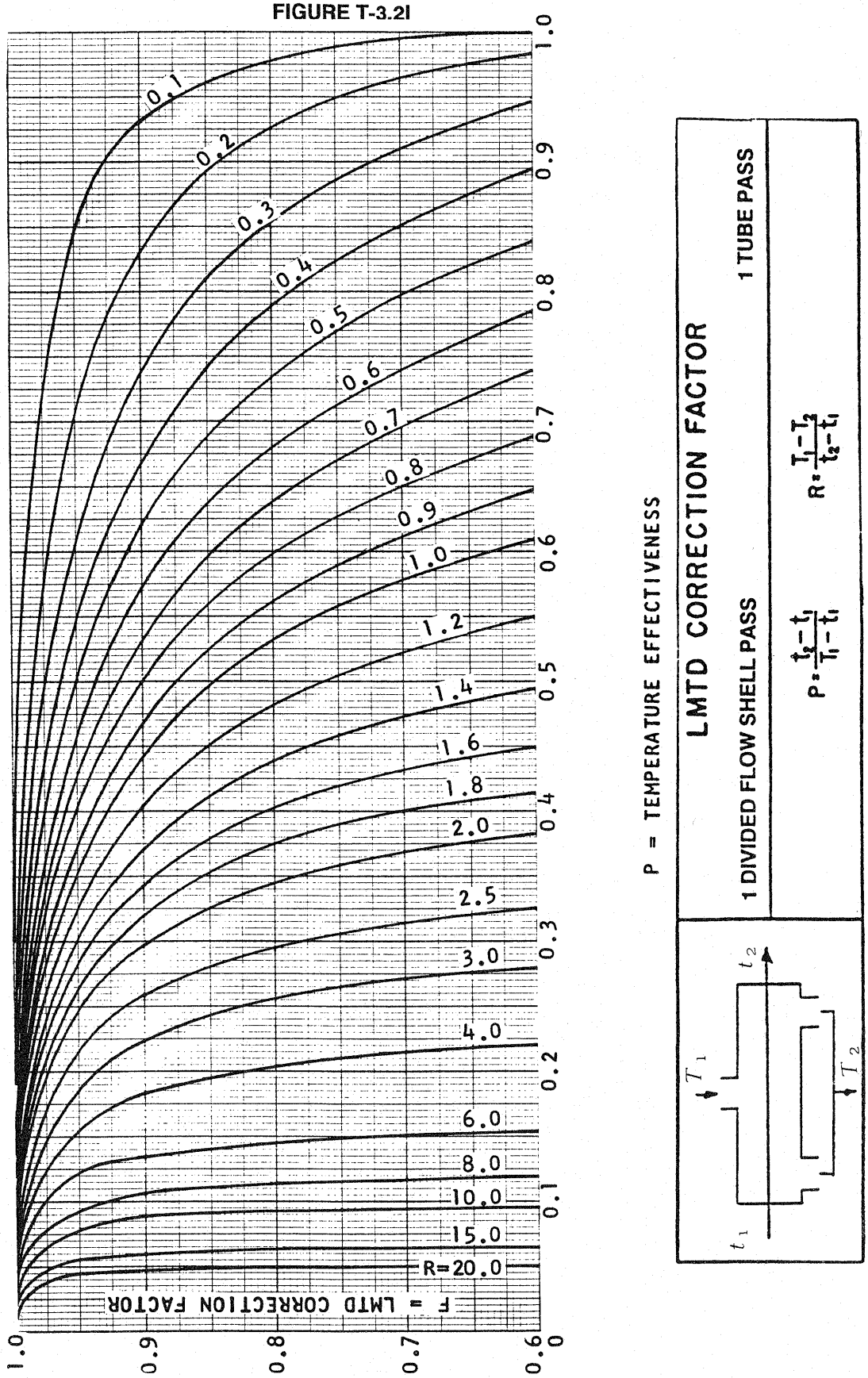
F = LMTD CORRECTION FACTOR
P = TEMPERATURE EFFECTIVENESS
0.1
0.2
0.3
0.4
0.5
0.6
0.7
0.8
0.9
1.0
1.2
1.4
1.6
1.8
2.0
2.5
3.0
4.0
6.0
8.0
10.0
15.0
R=20.0
LMTD CORRECTION FACTOR
1 DIVIDED FLOW SHELL PASS
1 TUBE PASS
$P = \frac{t_2 - t_1}{T_1 - t_1}$
$R = \frac{T_1 - T_2}{t_2 - t_1}$
T_1
T_2
t_2
t_1

FIGURE T-3.2J

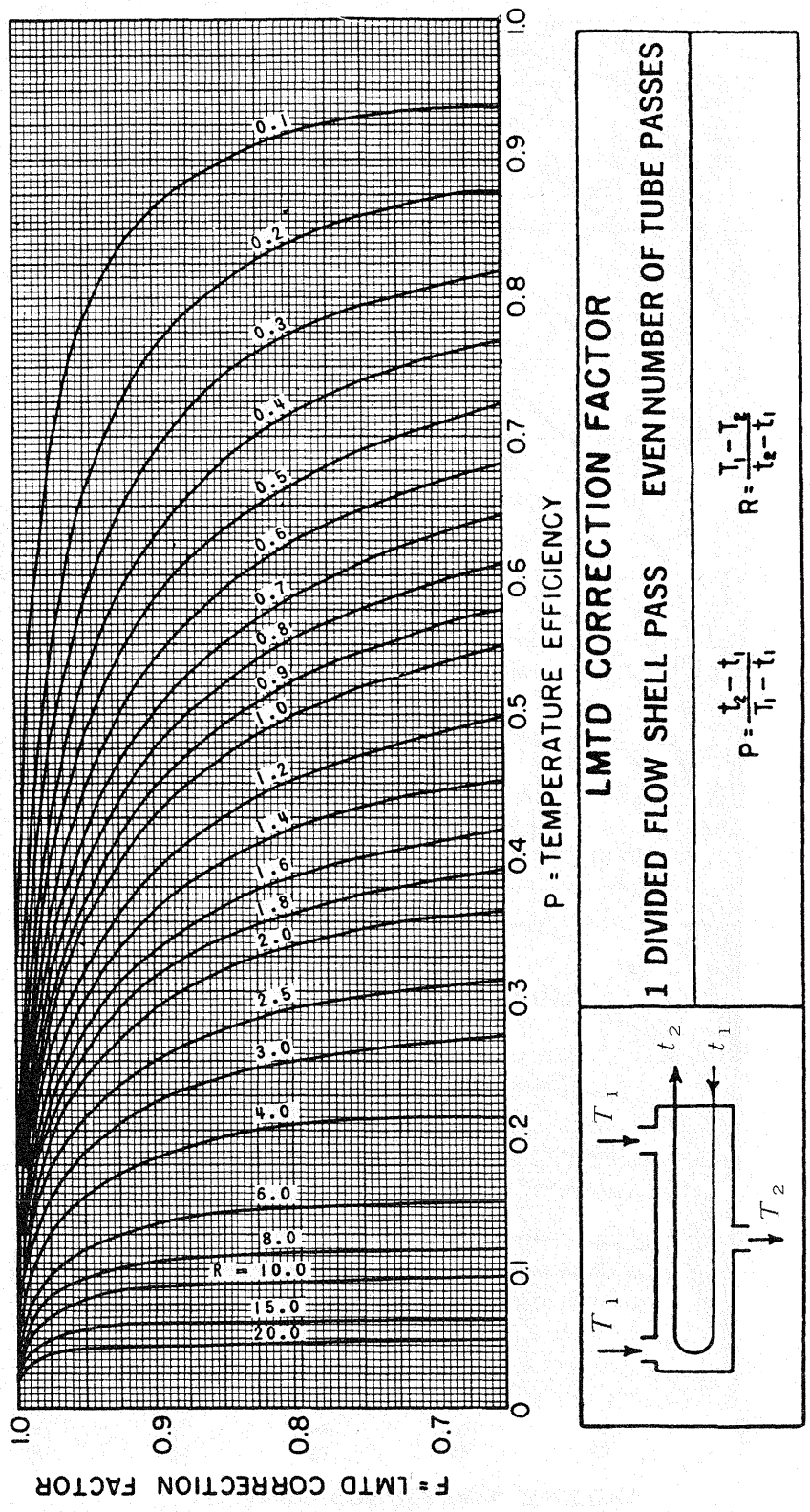
LMTD CORRECTION FACTOR
1 DIVIDED FLOW SHELL PASS EVEN NUMBER OF TUBE PASSES
$P=\frac{t_2-t_1}{T_1-t_1}$
$R=\frac{T_1-T_2}{t_2-t_1}$
T_1
t_2
t_1
T_2
T_1
P = TEMPERATURE EFFICIENCY
F = LMTD CORRECTION FACTOR
0.1
0.2
0.3
0.4
0.5
0.6
0.7
0.8
0.9
1.0
1.2
1.4
1.6
1.8
2.0
2.5
3.0
4.0
6.0
8.0
R = 10.0
15.0
20.0
0
0.1
0.2
0.3
0.4
0.5
0.6
0.7
0.8
0.9
1.0
1.0
0.9
0.8
0.7

FIGURE T-3.2K

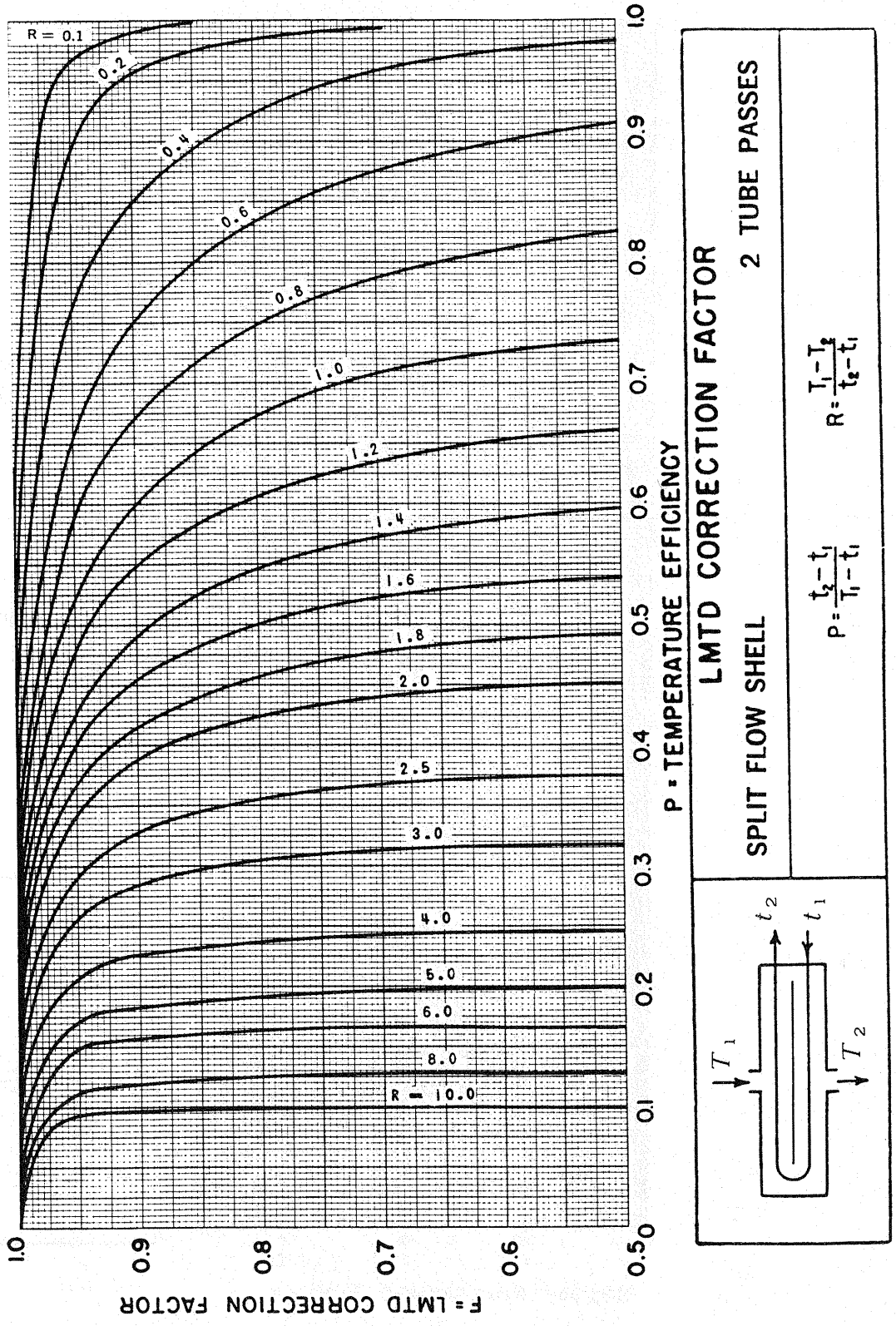
R = 0.1
0.2
0.4
0.6
0.8
1.0
1.2
1.4
1.6
1.8
2.0
2.5
3.0
4.0
5.0
6.0
8.0
R = 10.0
P = TEMPERATURE EFFICIENCY
F = LMTD CORRECTION FACTOR
1.0
0.9
0.8
0.7
0.6
0.5
0
0.1
0.2
0.3
0.4
0.5
0.6
0.7
0.8
0.9
1.0
LMTD CORRECTION FACTOR
SPLIT FLOW SHELL
2 TUBE PASSES
$P = \frac{t_2 - t_1}{T_1 - t_1}$
$R = \frac{T_1 - T_2}{t_2 - t_1}$
t_2
t_1
T_1
T_2

FIGURE T-3.2L

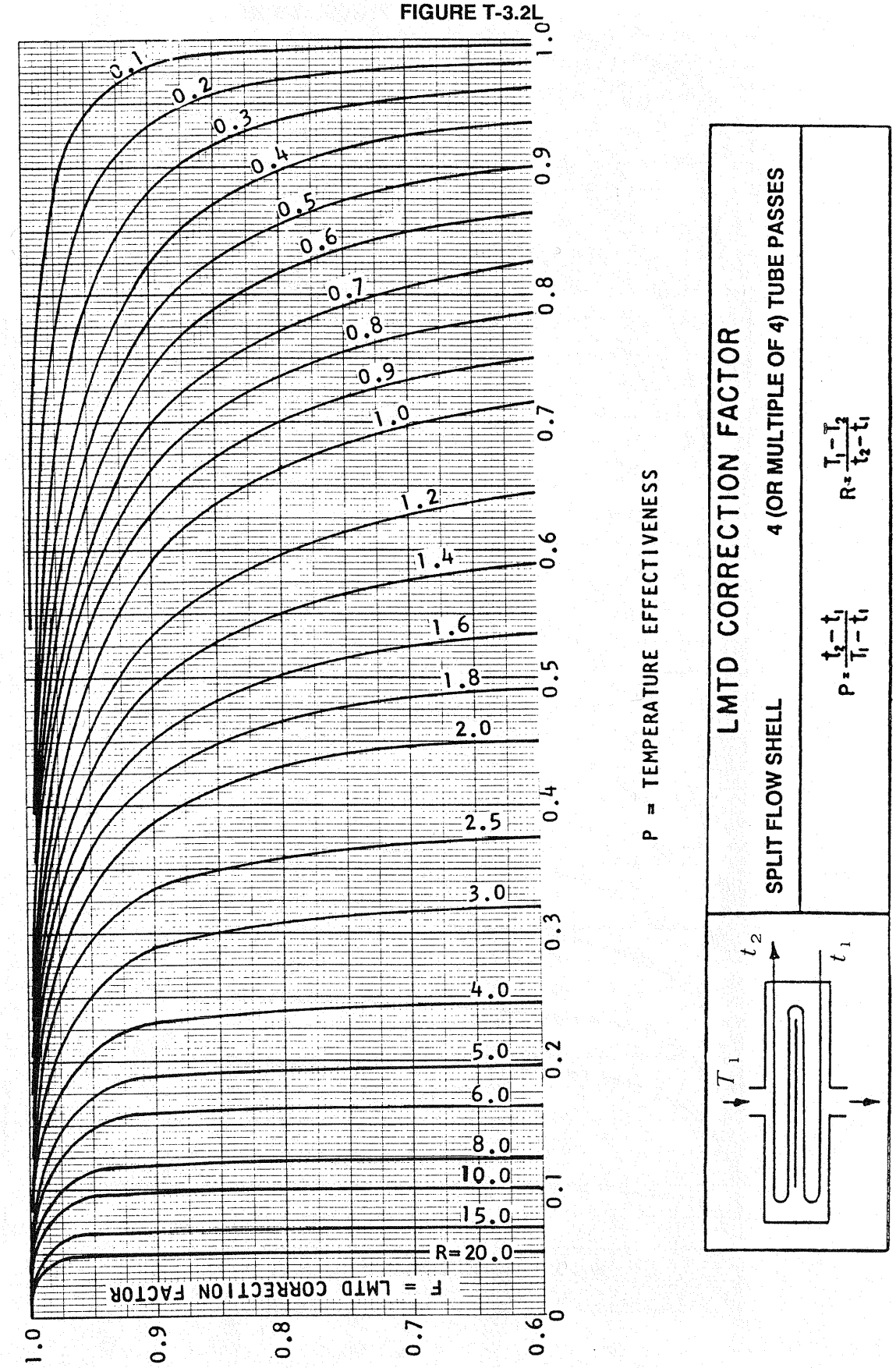
F = LMTD CORRECTION FACTOR
P = TEMPERATURE EFFECTIVENESS
0.1
0.2
0.3
0.4
0.5
0.6
0.7
0.8
0.9
1.0
1.2
1.4
1.6
1.8
2.0
2.5
3.0
4.0
5.0
6.0
8.0
10.0
15.0
R=20.0
LMTD CORRECTION FACTOR
SPLIT FLOW SHELL
4 (OR MULTIPLE OF 4) TUBE PASSES
$P = \frac{t_2 - t_1}{T_1 - t_1}$
$R = \frac{T_1 - T_2}{t_2 - t_1}$
t_2
t_1
T_1

FIGURE T-3.2M

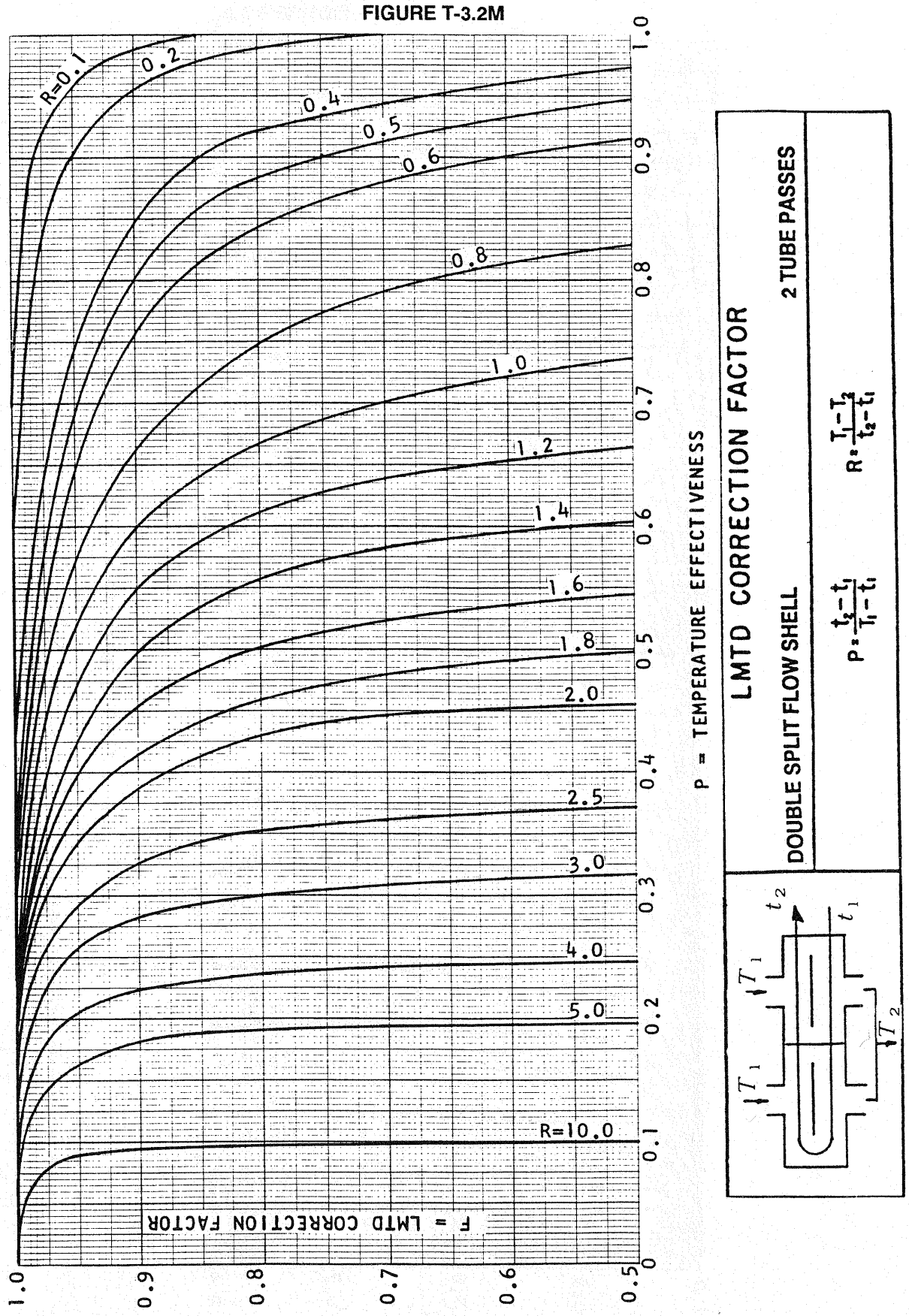
LMTD CORRECTION FACTOR
2 TUBE PASSES
DOUBLE SPLIT FLOW SHELL
$P = \frac{t_2 - t_1}{T_1 - t_1}$
$R = \frac{T_1 - T_2}{t_2 - t_1}$
P = TEMPERATURE EFFECTIVENESS
F = LMTD CORRECTION FACTOR
R=0.1
0.2
0.4
0.5
0.6
0.8
1.0
1.2
1.4
1.6
1.8
2.0
2.5
3.0
4.0
5.0
R=10.0
T_1
T_2
t_1
t_2

FIGURE T-3.3A

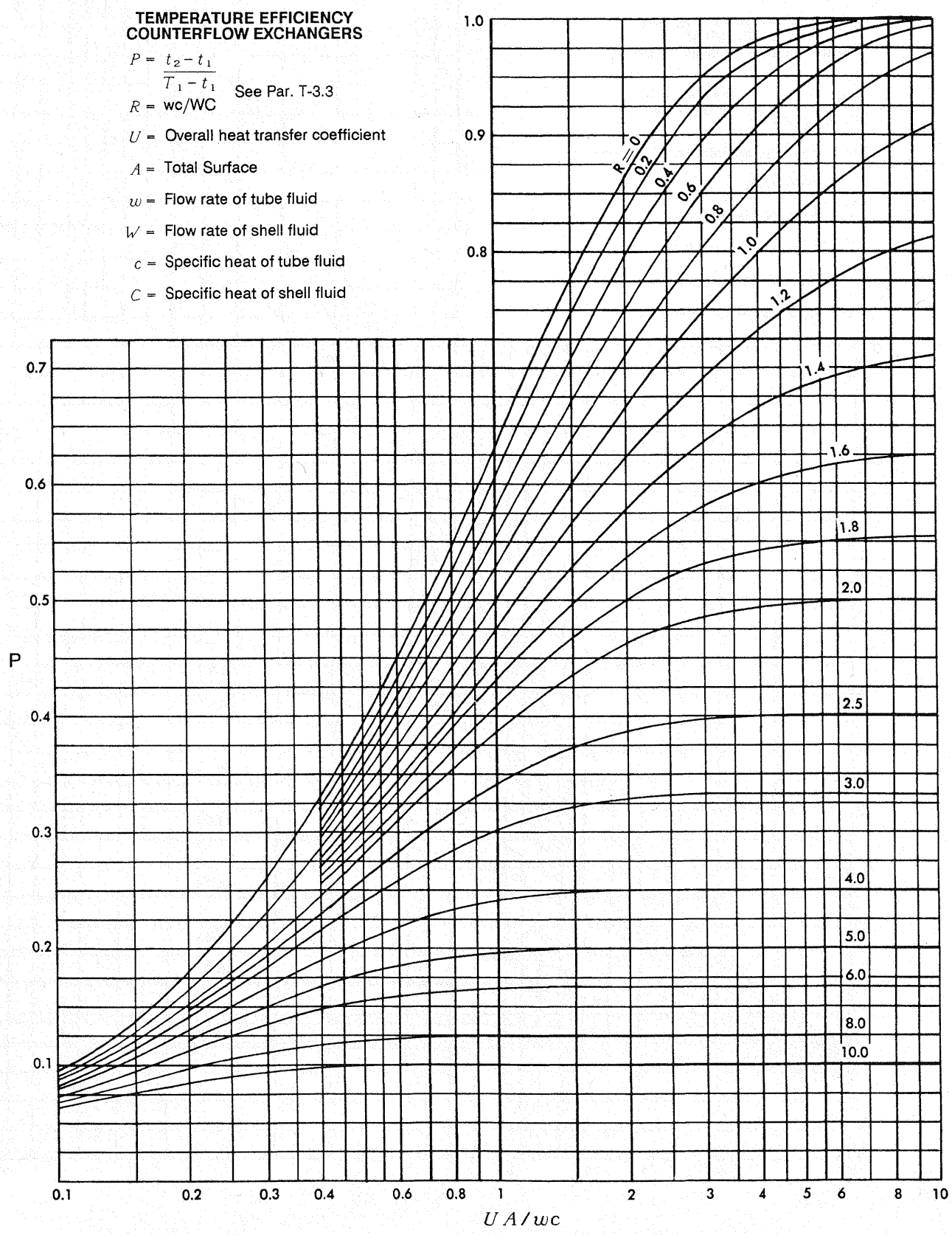
TEMPERATURE EFFICIENCY
COUNTERFLOW EXCHANGERS
P = (t2 − t1) / (T1 − t1)
R = wc/WC See Par. T-3.3
U = Overall heat transfer coefficient
A = Total Surface
w = Flow rate of tube fluid
W = Flow rate of shell fluid
c = Specific heat of tube fluid
C = Specific heat of shell fluid
P
UA/wc
R = 0
0.2
0.4
0.6
0.8
1.0
1.2
1.4
1.6
1.8
2.0
2.5
3.0
4.0
5.0
6.0
8.0
10.0
0.1
0.2
0.3
0.4
0.5
0.6
0.7
0.8
0.9
1.0
1
2
3
4
5
6
8
10

FIGURE T-3.3B

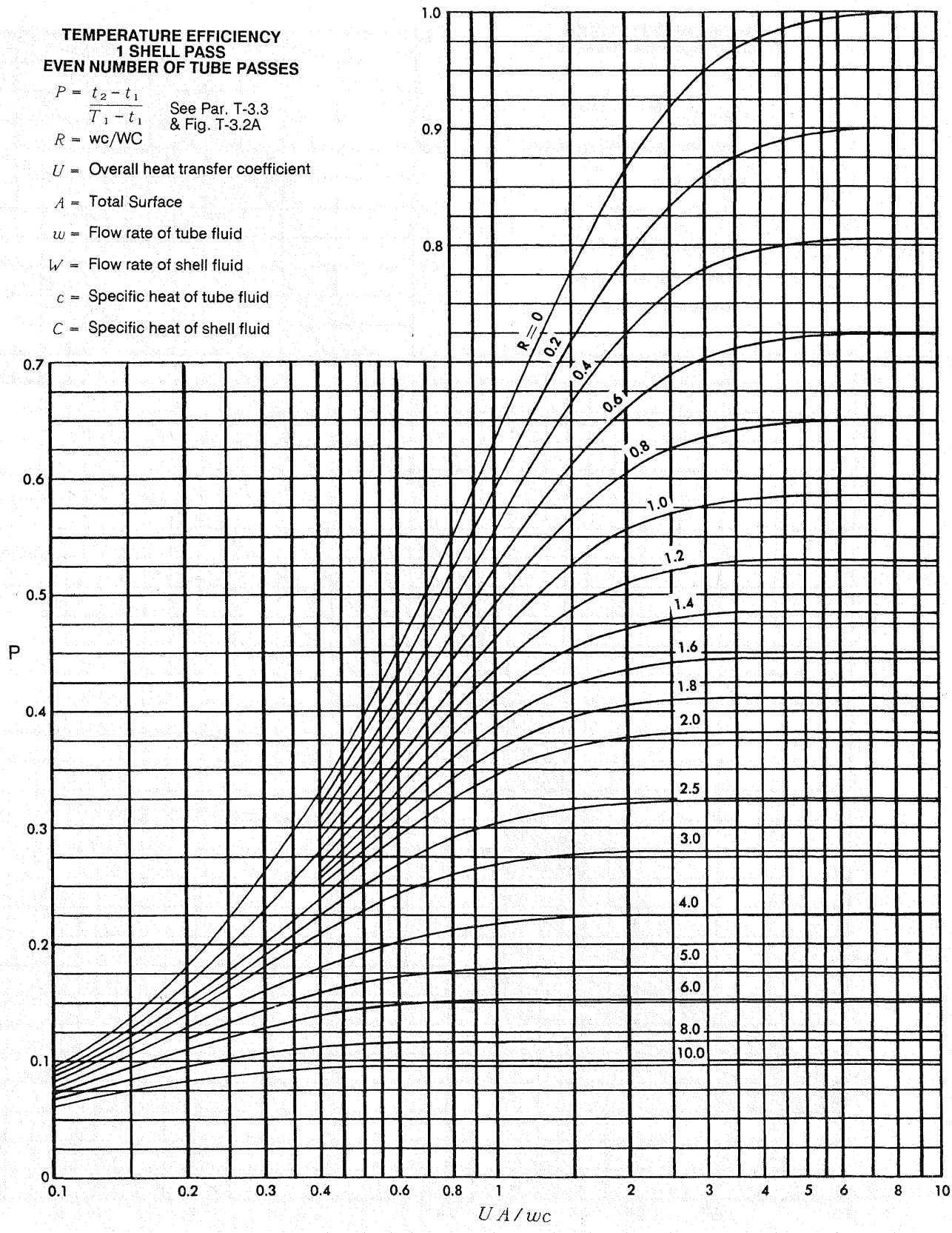
TEMPERATURE EFFICIENCY
1 SHELL PASS
EVEN NUMBER OF TUBE PASSES
$P = \frac{t_2 - t_1}{T_1 - t_1}$ See Par. T-3.3 & Fig. T-3.2A
R = wc/WC
U = Overall heat transfer coefficient
A = Total Surface
w = Flow rate of tube fluid
W = Flow rate of shell fluid
c = Specific heat of tube fluid
C = Specific heat of shell fluid
P
UA/wc
R = 0
0.2
0.4
0.6
0.8
1.0
1.2
1.4
1.6
1.8
2.0
2.5
3.0
4.0
5.0
6.0
8.0
10.0

FIGURE T-3.3C

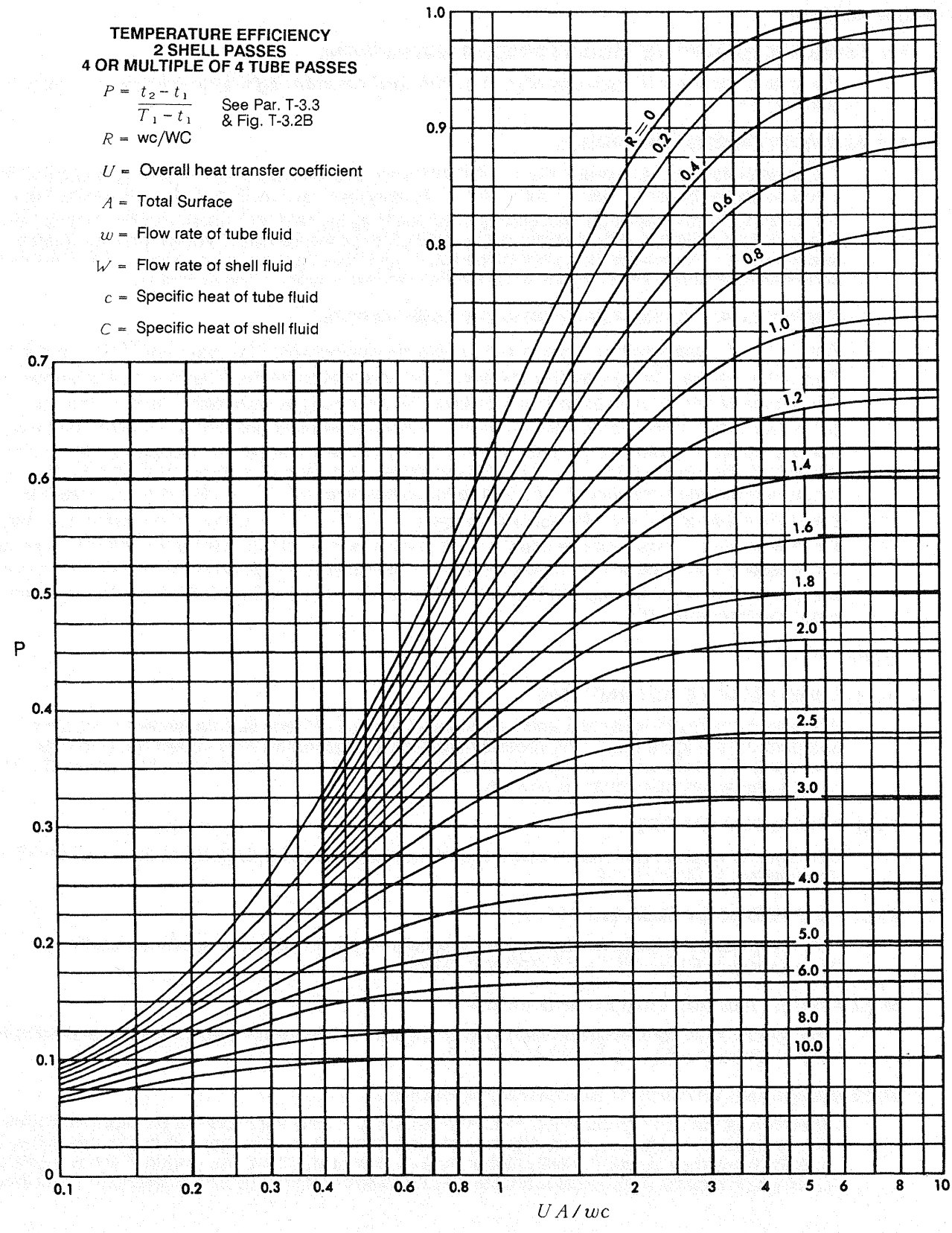
TEMPERATURE EFFICIENCY
2 SHELL PASSES
4 OR MULTIPLE OF 4 TUBE PASSES
$P = \frac{t_2 - t_1}{T_1 - t_1}$ See Par. T-3.3 & Fig. T-3.2B
R = wc/WC
U = Overall heat transfer coefficient
A = Total Surface
w = Flow rate of tube fluid
W = Flow rate of shell fluid
c = Specific heat of tube fluid
C = Specific heat of shell fluid
P
UA/wc
R = 0
0.2
0.4
0.6
0.8
1.0
1.2
1.4
1.6
1.8
2.0
2.5
3.0
4.0
5.0
6.0
8.0
10.0
0
0.1
0.2
0.3
0.4
0.5
0.6
0.7
0.8
0.9
1.0
0.1
0.2
0.3
0.4
0.6
0.8
1
2
3
4
5
6
8
10

(Note: This section is not metricated)

P-1 FLUID DENSITY

P-1.1 SPECIFIC GRAVITY OF LIQUID PETROLEUM FRACTIONS

The specific gravities of liquid petroleum fractions and saturated light hydrocarbons are shown in Figure P-1.1.

P-1.2 DENSITY OF ORGANIC LIQUIDS

The general density nomograph Fig. P-1.2 permits the approximation of the density of organic liquids at temperatures between -150° F and +500° F, if densities at two temperatures are known. Table P-1.2 lists the coordinates on the center grid for locating the reference points for 65 compounds. The reference point for a substance may be determined if the density is known for two different temperatures. The intersection point of the two straight lines joining the corresponding values of the known temperatures and densities is the desired reference point of the substance.

P-1.3 COMPRESSIBILITY FACTORS FOR GASES AND VAPORS

The $P - v - T$ relationships for gases and vapors may conveniently be expressed by the equation $Pv = ZRT$, where P is the absolute pressure, v is the specific volume, T is the absolute temperature, R is a constant which may be found by dividing the universal gas constant R by the molecular weight of the gas, and Z is the compressibility factor. Z has the value of unity for an ideal gas under all conditions and, therefore, is a measure of the extent of the deviation of a real gas or vapor from the ideal state. Figures P-1.3A, P-1.3B, P-1.3C are generalized plots of compressibility factor as a function of reduced pressure, P / P_c and reduced temperature, T / T_c. The dotted curves represent constant values of the pseudo-reduced volume $v_r' = v / (RT_c / P_c)$ where the subscript c refers to the critical value. These may be used to calculate pressure (or temperature) when the temperature (or pressure) and specific volume are known. If P is expressed in pounds per square inch, v in cubic feet per pound, and T in degrees Rankine, the numerical value of R is 10.73. For critical property data, see Paragraph P-6.

P-2 SPECIFIC HEAT

P-2.1 LIQUID PETROLEUM FRACTIONS

The specific heats of liquid petroleum fractions of various API gravities are shown as functions of temperature in Figure P-2.1. The specific heat versus temperature lines shown apply to virgin mid-continent stock and must be corrected for other stocks. An inset curve of this correction factor versus characterization factor is provided.

P-2.2 PETROLEUM VAPORS

The specific heats of petroleum vapors of various characterization factors are shown as functions of temperature in Figure P-2.2.

P-2.3 PURE HYDROCARBON GASES

The low pressure specific heats of a number of pure hydrocarbons are shown as functions of temperature in Figures P-2.3A, P-2.3B and P-2.3C.

P-2.4 MISCELLANEOUS LIQUIDS AND GASES

The specific heats of miscellaneous liquids and gases at various temperatures may be read from the alignment charts, Figures P-2.4A and P-2.4B.

P-2.5 GASES AND VAPORS AT ELEVATED PRESSURES

Specific heat data in Figures P-2.2, P-2.3A, P-2.3C and P-2.4B apply only at pressures low enough so that the specific heats are not significantly affected by pressure changes. At higher pressures, the specific heats may be substantially higher than the low pressure values. Figure P-2.5 is a generalized chart which may be used to calculate the approximate correction to the low pressure specific heat

for any gas at high pressure. The isothermal change in molal specific heat, $\Delta C_p = C_p - C_p^*$, is plotted against reduced pressure, P_r, with reduced temperature, T_r, as a parameter. Outside the range of the chart, the following empirical equations are accurate enough for most practical purposes. For $T_r > 1.2$ and $\Delta C_p < 2$, $\Delta C_p = 5.03 P_r / T_r^3$, for $T_r < 1.2$ and $\Delta C_p < 2.5$, $\Delta C_p = 9 P_r / T_r^6$. For critical property data, see Paragraph P-6.1 and P-6.2.

P-3 HEAT CONTENT

Heat content of petroleum fractions, including the effect of pressure, are shown as functions of temperature and API gravity for various UOP K values in Figure P-3.1.

The latent heats of vaporization of various liquids may be estimated by the use of Figure P-3.2. The recommended range of use is indicated for the compounds listed.

See Table P-3.3 for heat capacity ratios for various gases.

P-4 THERMAL CONDUCTIVITY

P-4.1 CONVERSION OF UNITS

Table P-4.1 gives factors for converting thermal conductivity values from one set of units to another.

P-4.2 HYDROCARBON LIQUIDS

The thermal conductivities of liquid normal paraffinic hydrocarbons are shown in Figure P-4.2.

P-4.3 MISCELLANEOUS LIQUIDS AND GASES

Tables P-4.3A and P-4.3B give tabulated values of thermal conductivity for a number of liquids and gases at atmospheric pressure.

P-4.4 GASES AND LIQUIDS AT ELEVATED PRESSURES

Thermal conductivity for gases at elevated pressure can be corrected by the use of Figure P-4.4A. Thermal conductivity for liquids at elevated pressure can be corrected by the use of Figure P-4.4B. This chart is intended for use above 500 psia and when T / T_c is less than 0.95.

P-5 VISCOSITY

P-5.1 VISCOSITY CONVERSION

A viscosity conversion plot, Figure P-5.1, provides a means of converting viscosity from Saybolt, Redwood or Engler time to kinematic viscosity in centistokes. The absolute viscosity in centipoises may be determined by multiplying the kinematic viscosity in centistokes by the specific gravity. Table P-5.1 gives factors for converting viscosity values to various systems of units.

P-5.2 PETROLEUM OILS

The viscosities of petroleum oils having Watson and Nelson (UOP) characterization factors of 10.0, 11.0, 11.8 and 12.5 are shown plotted against temperatures in Figures P-5.2A, P-5.2B, P-5.2C and P-5.2D.

P-5.3 LIQUID PETROLEUM FRACTIONS

Figures P-5.3A and P-5.3B give viscosity data for a number of typical petroleum fractions plotted as straight lines on ASTM viscosity charts. These charts are so constructed that for any given petroleum oil the viscosity-temperature points lie on a straight line. They are, therefore, a convenient means for determining the viscosity of a petroleum oil at any temperature, provided viscosities at two temperatures are known. Streams of similar API gravity may have widely different viscosities; therefore, values of viscosity shown here should be considered as typical only.

P-5.4 MISCELLANEOUS LIQUIDS AND GASES

The viscosities of certain liquids are shown as functions of temperature in Figure P-5.4A. The viscosities of certain gases and vapors at one atmosphere pressure are given by Figure P-5.4B.

P-5.5 EFFECT OF PRESSURE ON GAS VISCOSITY

Figure P-5.5 is a generalized chart which may be used to estimate the viscosities of gases and vapors at elevated pressure if the critical temperature and pressure and the viscosity at low pressure are known. The viscosity ratio, μ_p/μ_{atm}, is plotted against reduced pressure, P_r, with reduced temperature, T_r, as a parameter, where, μ_{atm} and μ_p are respectively the viscosities at atmospheric pressure and at pressure P. For critical property data, see Paragraph P-6.

P-6 CRITICAL PROPERTIES

P-6.1 PURE SUBSTANCES

Table P-6.1 gives values of the molecular weights, critical temperatures, and critical pressures for a variety of pure compounds. For the calculation of compressibility factor, it is recommended that the critical pressures and temperatures of hydrogen, helium, and neon be increased by 118 psi and 14.4° R respectively.

P-6.2 GAS AND VAPOR MIXTURES

Figures P-1.3, P-2.5, and P-5.5 may be used to estimate the properties of gas mixtures as well as pure substances if pseudo-critical properties are used in place of the critical values. The pseudo-critical temperature and pressure are defined as follows:

$$T_{p.c.} = Y_1 T_{c1} + Y_2 T_{c2} + \ldots\ldots\ldots + Y_n T_{cn}$$

$$P_{p.c.} = Y_1 P_{c1} + Y_2 P_{c2} + \ldots\ldots\ldots + Y_n P_{cn}$$

where Y_1, Y_2, etc. are the mole fractions of the individual components and T_{c1}, T_{c2}, etc., and P_{c1}, P_{c2}, etc. are their critical temperatures and pressures.

P-7 PROPERTIES OF GAS AND VAPOR MIXTURES

To estimate properties of a gas or vapor mixture for which the individual component fractions and properties are known, the following formulas may be used:

P-7.1 SPECIFIC HEAT

$$C_{pmix} = X_1 C_{p1} + X_2 C_{p2} + \ldots\ldots\ldots\ldots + X_N C_{pN}$$

P-7.2 THERMAL CONDUCTIVITY

$$K_{mix} = \frac{K_1 Y_1 (M_1)^{1/3} + K_2 Y_2 (M_2)^{1/3} + \ldots\ldots + K_N Y_N (M_N)^{1/3}}{Y_1 (M_1)^{1/3} + Y_2 (M_2)^{1/3} + \ldots\ldots + Y_N (M_N)^{1/3}}$$

P-7.3 VISCOSITY

$$\mu_{mix} = \frac{\mu_1 Y_1 (M_1)^{1/2} + \mu_2 Y_2 (M_2)^{1/2} + \ldots\ldots + \mu_N Y_N (M_N)^{1/2}}{Y_1 (M_1)^{1/2} + Y_2 (M_2)^{1/2} + \ldots\ldots + Y_N (M_N)^{1/2}}$$

where, for component "N":

X_N = Weight Fraction
Y_N = Mole Fraction
M_N = Molecular Weight
C_{pN} = Specific Heat
K_N = Thermal Conductivity
μ_N = Viscosity

P-8 SELECTED REFERENCES

(1) Reid, R. C. and Sherwood, T. K., "Properties of Gases and Liquids", 2nd Ed., McGraw-Hill Book Company, Inc., New York, 1966.

(2) Comings, E. W., "High Pressure Technology", McGraw-Hill Book Company, Inc., New York, 1956.

(3) Hougen, O. A., Watson, K. M., Ragatz, R. A., "Chemical Process Principles", Part 1, 2nd Ed., John Wiley & Sons, Inc., New York, 1956.

(4) Tsederberg, N. V., "Thermal Conductivities of Gases and Liquids", The M.I.T. Press, Massachusetts Institute of Technology, Cambridge, Massachusetts, 1965.

(5) Yaws, C. L., "Physical Properties, Chemical Engineering", McGraw-Hill Book Company, Inc., New York, 1977.

(6) Gallant, R. W., "Physical Properties of Hydrocarbons", Vol. 1 & 2, Gulf Publishing Co., Houston, Texas, 1968.

FIGURE P-1.1

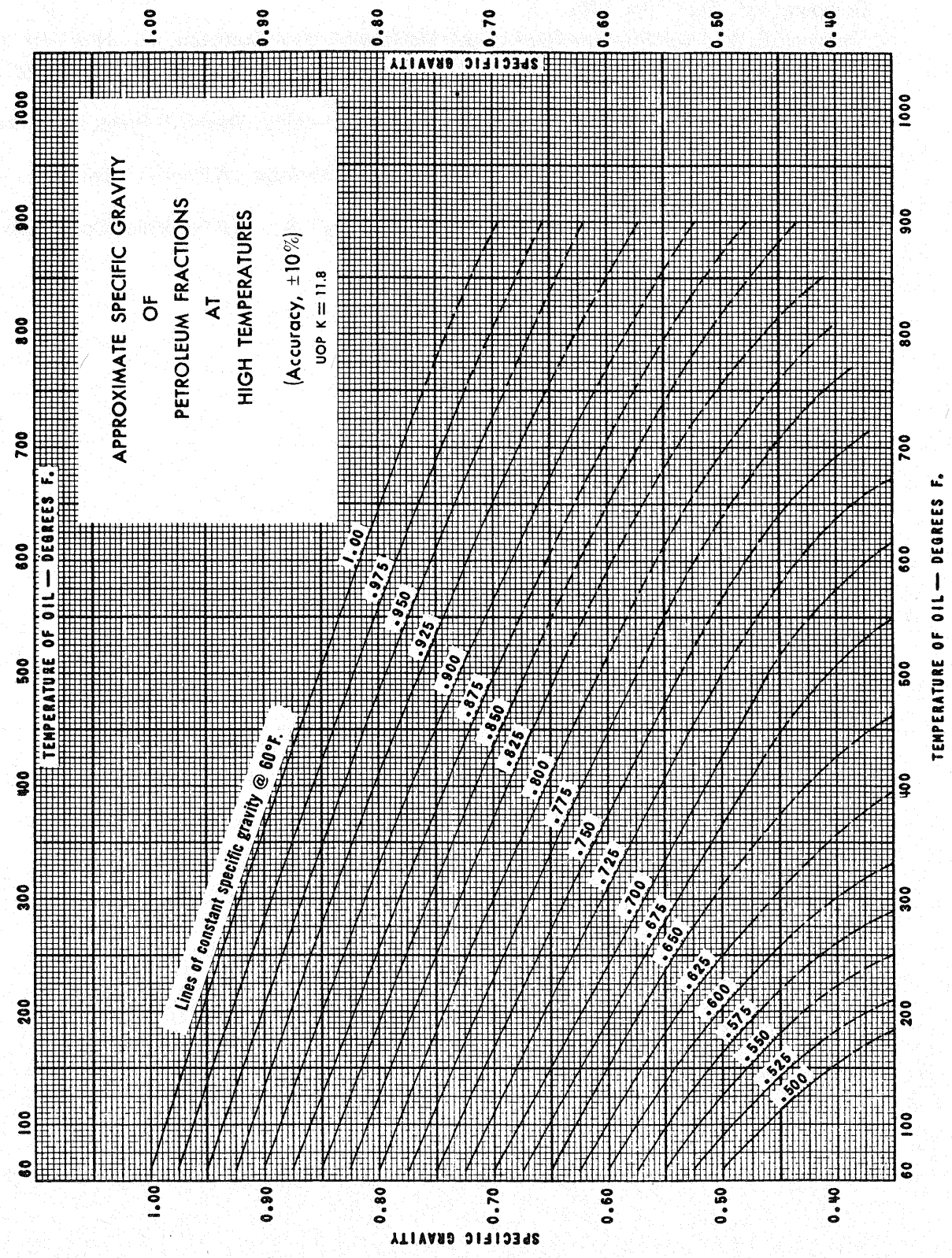
APPROXIMATE SPECIFIC GRAVITY
OF
PETROLEUM FRACTIONS
AT
HIGH TEMPERATURES
(Accuracy, ±10%)
UOP K = 11.8
Lines of constant specific gravity @ 60°F.
SPECIFIC GRAVITY
TEMPERATURE OF OIL — DEGREES F.
1.00
0.90
0.80
0.70
0.60
0.50
0.40
60
100
200
300
400
500
600
700
800
900
1000
.500
.525
.550
.575
.600
.625
.650
.675
.700
.725
.750
.775
.800
.825
.850
.875
.900
.925
.950
.975
1.00

FIGURE P-1.2

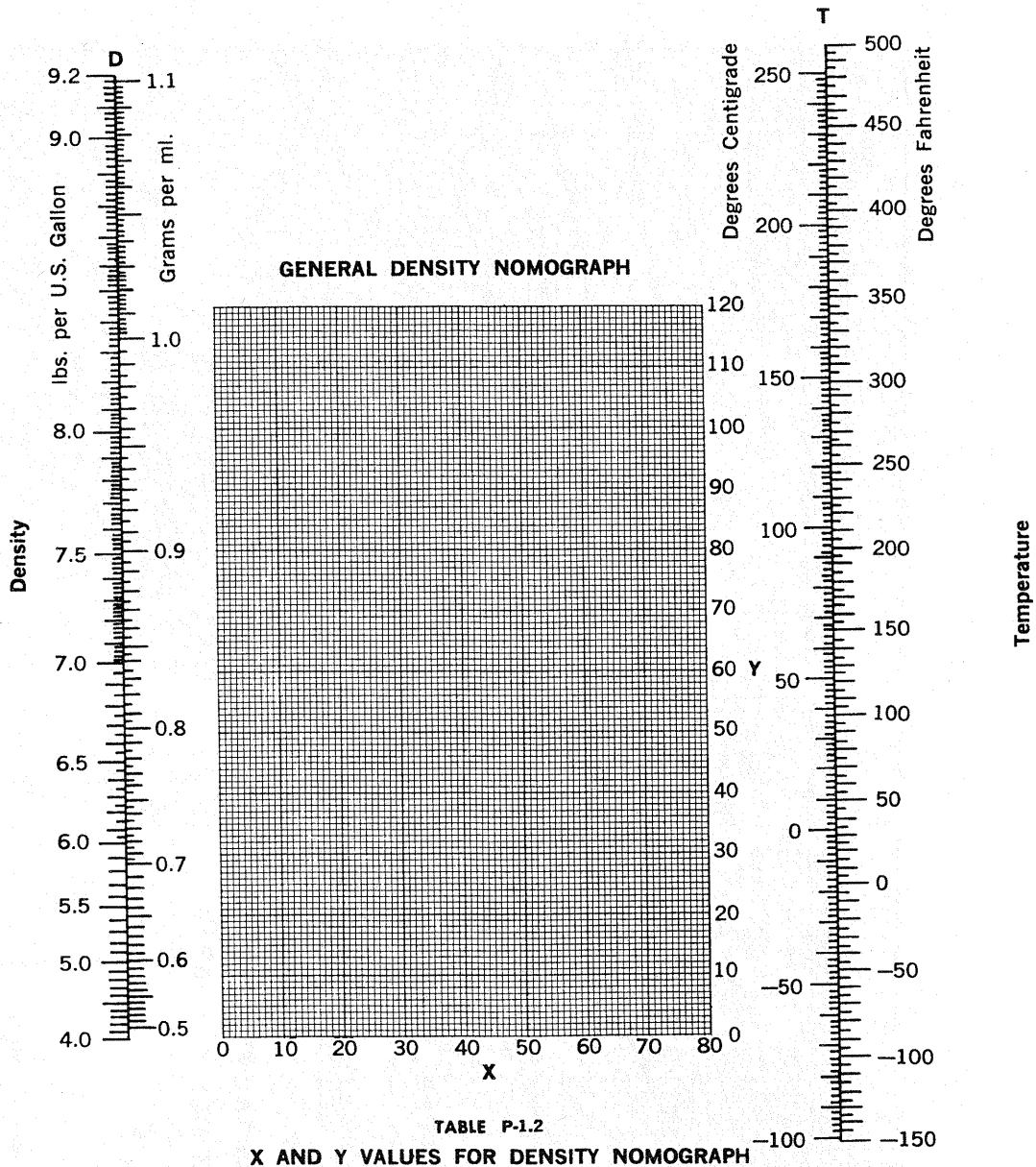

TABLE P-1.2

X AND Y VALUES FOR DENSITY NOMOGRAPH

Compound	X	Y	Compound	X	Y	Compound	X	Y
Acetic Acid	40.6	93.5	Ethyl chloride	42.7	62.4	Methyl sulfide	31.9	57.4
Acetone	26.1	47.8	Ethylene	17.0	3.5	n-Nonane	16.2	36.5
Acetonitrile	21.8	44.9	Ethyl ether	22.6	35.8	n-Octadecane	16.2	46.5
Acetylene	20.8	10.1	Ethyl formate	37.6	68.4	n-Octane	12.7	32.5
Ammonia	22.4	24.6	Ethyl propionate	32.1	63.9	n-Pentadecane	15.8	44.2
Isoamyl alcohol	20.5	52.0	Ethyl propyl ether	20.0	37.0	n-Pentane	12.6	22.6
Ammine	33.5	92.5	Ethyl auindo	25.7	55.3	n-Nonadecane	14.9	47.0
Benzene	32.7	63.0	Fluorobenzene	41.9	87.6	Isopentane	13.5	22.5
n-Butyric acid	31.3	78.7	n-Heptadecane	15.6	45.7	Phenol	36.7	103.8
Isobutane	13.7	16.5	n-Heptane	12.6	29.8	Phosphine	28.0	22.1
Isobutyric acid	31.5	75.9	n-Hexadecane	15.8	45.0	Propane	14.2	12.2
Carbon dioxide	78.6	45.4	n-Hexane	13.5	27.0	Propionic acid	35.0	83.5
Chlorobenzene	41.7	105.0	Methanethiol	37.3	59.5	Piperidene	27.5	60.0
Cyclohexane	19.6	44.0	Methyl acetate	40.1	70.3	Propionitrile	20.1	44.6
n-Decane	16.0	38.2	Methyl alcohol	25.8	49.1	Propyl acetate	33.0	65.5
n-Dedecane	14.3	41.4	Methyl n-butyrate	31.5	65.5	Propyl alcohol	23.8	50.8
Diethylamine	17.8	33.5	Methyl isobutyrate	33.0	64.1	Propyl formate	33.8	66.7
n-Elconane	14.8	47.5	Methyl chloride	52.3	62.9	n-Tetradecane	15.8	43.3
Ethane	10.8	4.4	Methyl ether	27.2	30.1	n-Tridecane	15.3	42.4
Ethanethiol	32.0	55.5	Methyl ethyl ether	25.0	34.4	Triethylamine	17.9	37.0
Ethyl acetate	35.0	95.0	Methyl formate	46.4	74.6	n-Undecane	14.4	39.2
Ethyl alcohol	24.2	48.6	Methyl propionate	36.5	68.3			

Ref: Othmer, Josefowitz & Schmutzler, Ind. Engr. Chem. Vol. 40,5,883-5

FIGURE P-1.3A

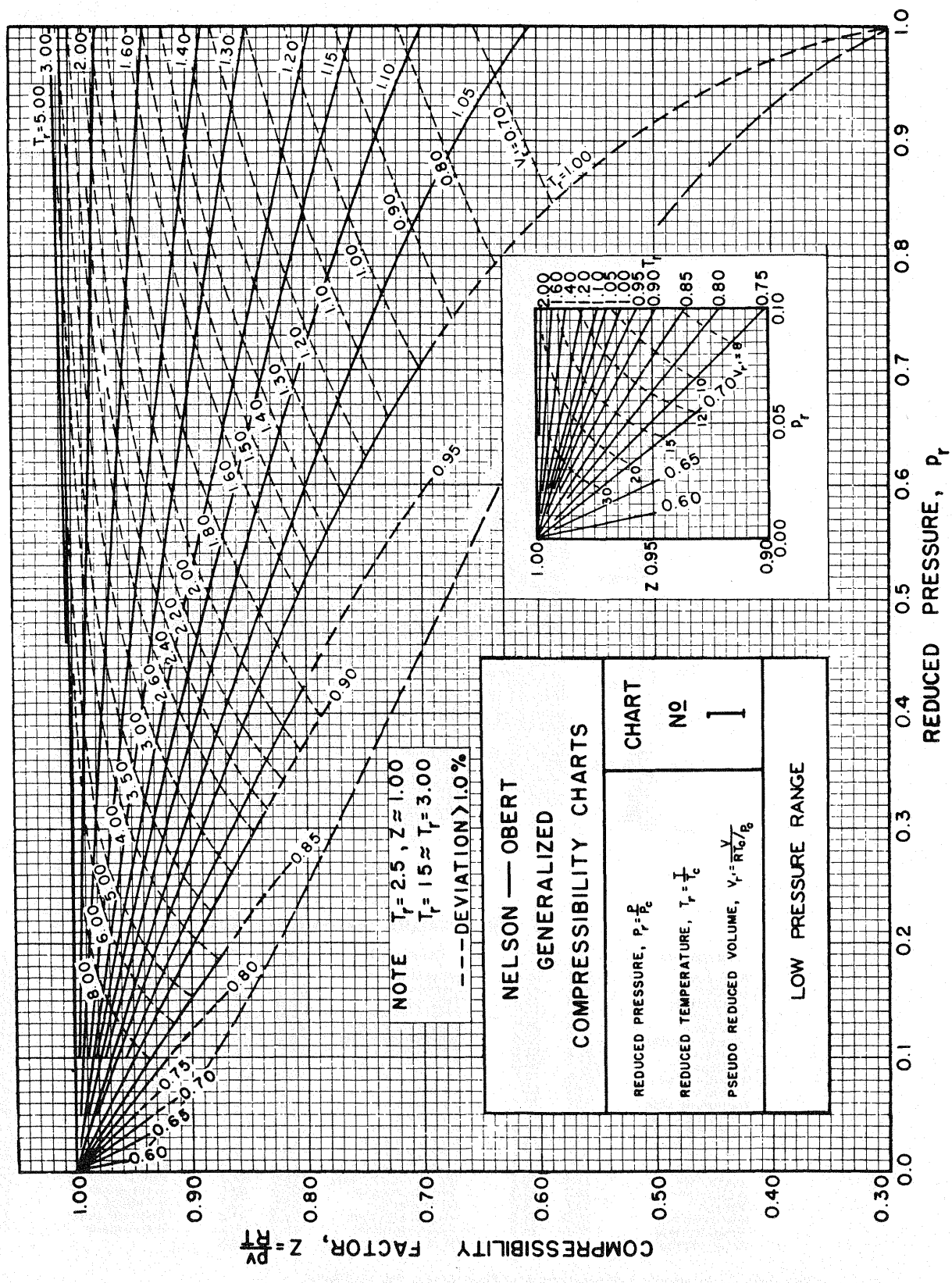
NELSON — OBERT
GENERALIZED
COMPRESSIBILITY CHARTS
CHART
NO
1
REDUCED PRESSURE, $P_r = \frac{P}{P_c}$
REDUCED TEMPERATURE, $T_r = \frac{T}{T_c}$
PSEUDO REDUCED VOLUME, $V_r = \frac{V}{RT_c/P_c}$
LOW PRESSURE RANGE
NOTE $T_r = 2.5$, $Z \approx 1.00$
$T_r = 1.5 \approx T_r = 3.00$
---DEVIATION > 1.0%
COMPRESSIBILITY FACTOR, $Z = \frac{PV}{RT}$
REDUCED PRESSURE, P_r

FIGURE P-1.3B

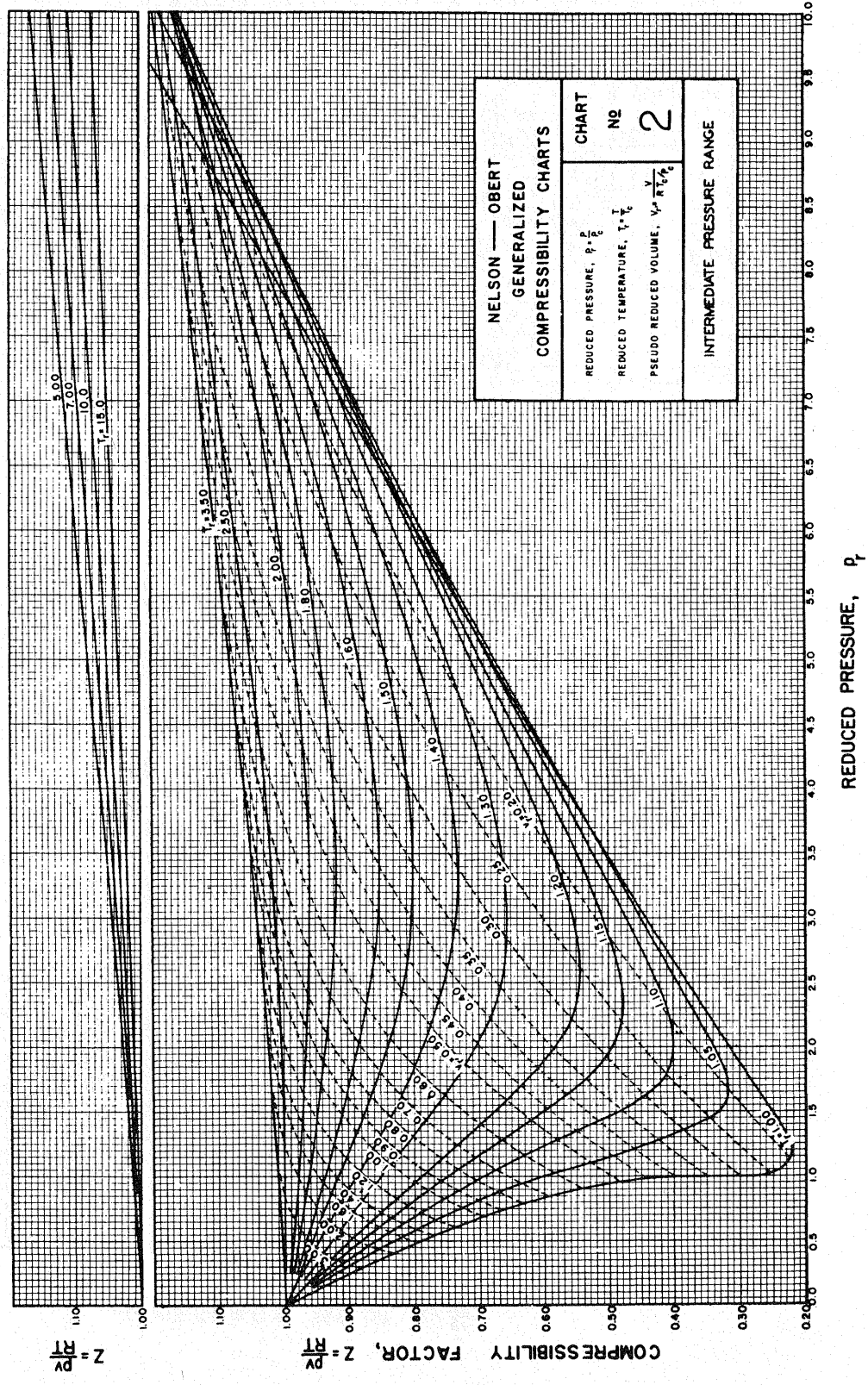
NELSON — OBERT
GENERALIZED
COMPRESSIBILITY CHARTS
CHART
Nº
2
REDUCED PRESSURE, $P_r = \frac{P}{P_c}$
REDUCED TEMPERATURE, $T_r = \frac{T}{T_c}$
PSEUDO REDUCED VOLUME, $V_r = \frac{V}{RT_c/P_c}$
INTERMEDIATE PRESSURE RANGE
COMPRESSIBILITY FACTOR, $Z = \frac{PV}{RT}$
REDUCED PRESSURE, P_r
$Z = \frac{PV}{RT}$

FIGURE P-1.3C

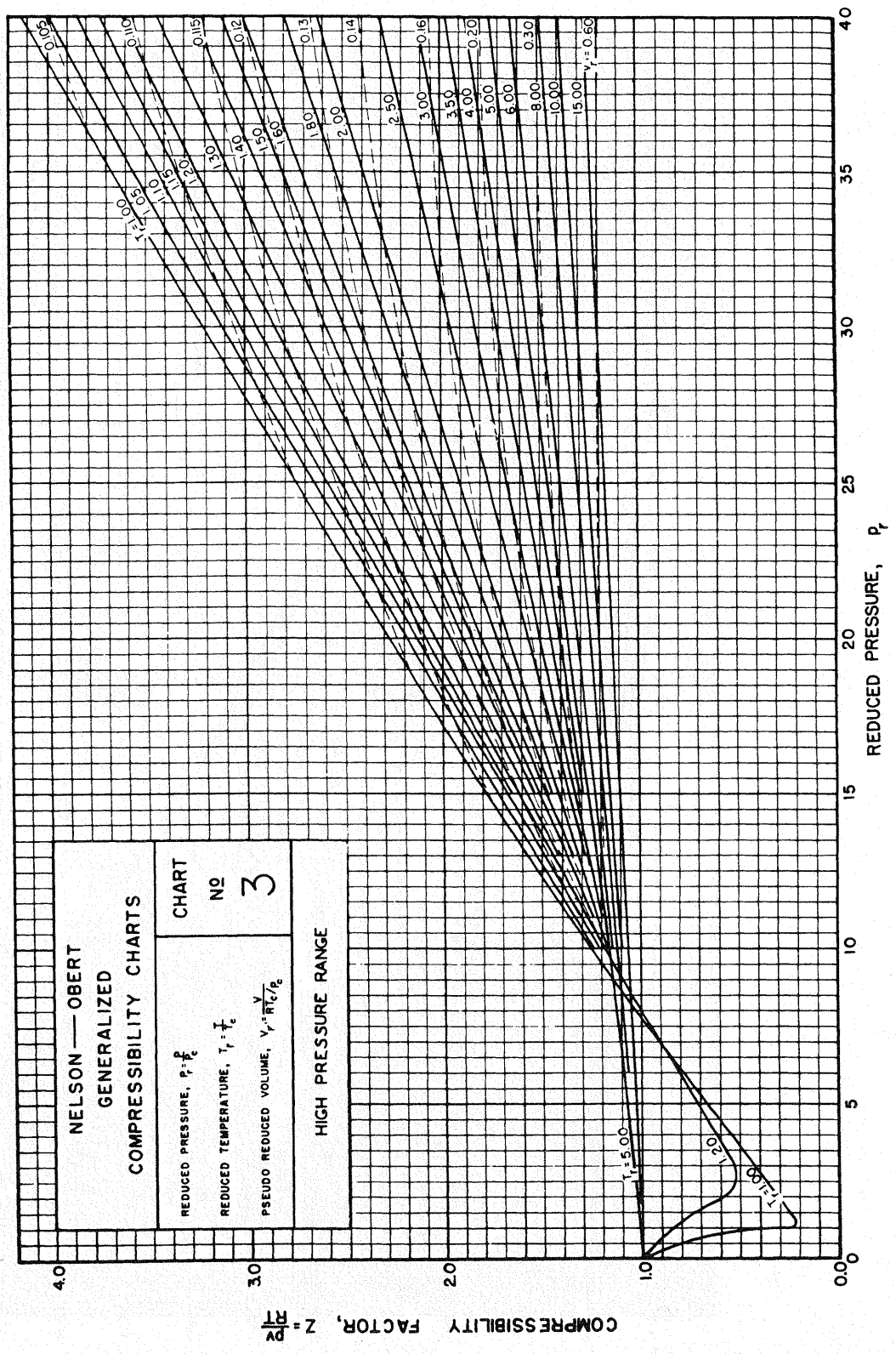
NELSON — OBERT
GENERALIZED
COMPRESSIBILITY CHARTS
REDUCED PRESSURE, $P_r = \frac{P}{P_c}$
REDUCED TEMPERATURE, $T_r = \frac{T}{T_c}$
PSEUDO REDUCED VOLUME, $V_r = \frac{V}{RT_c/P_c}$
CHART
No
3
HIGH PRESSURE RANGE
COMPRESSIBILITY FACTOR, $Z = \frac{PV}{RT}$
REDUCED PRESSURE, P_r
0.0
5
10
15
20
25
30
35
40
1.0
2.0
3.0
4.0
$T_r = 5.00$
2.00
1.50
1.40
1.30
1.20
1.15
1.10
1.05
1.00
0.05
0.110
0.115
0.12
0.13
0.14
0.16
0.20
0.30
$V_r = 0.60$
15.00
10.00
8.00
6.00
5.00
4.00
3.50
3.00
2.50
2.00
1.80
1.60
1.50

FIGURE P-2.1

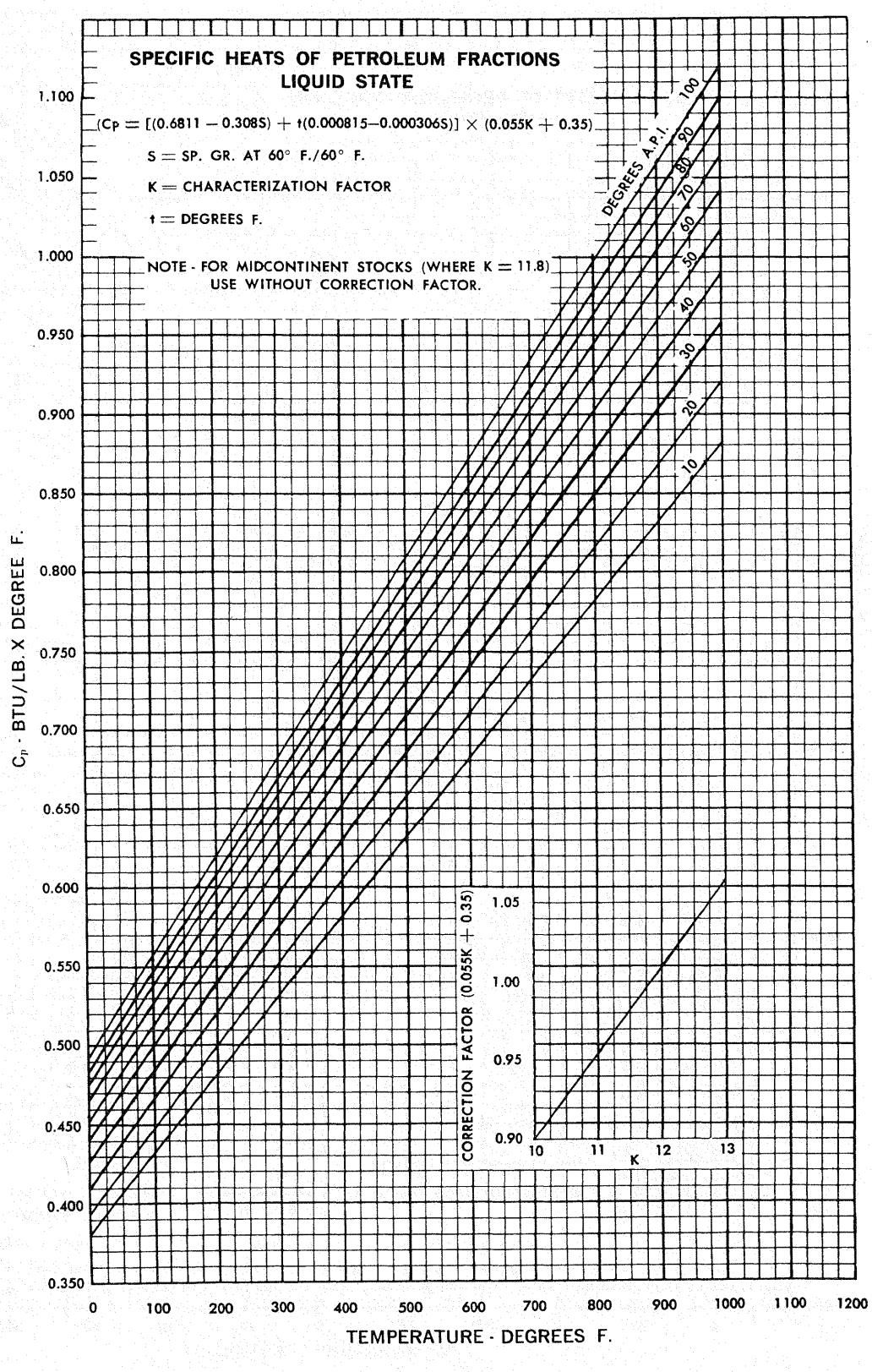
SPECIFIC HEATS OF PETROLEUM FRACTIONS
LIQUID STATE
(Cp = [(0.6811 − 0.308S) + t(0.000815−0.000306S)] × (0.055K + 0.35)
S = SP. GR. AT 60° F./60° F.
K = CHARACTERIZATION FACTOR
t = DEGREES F.
NOTE - FOR MIDCONTINENT STOCKS (WHERE K = 11.8) USE WITHOUT CORRECTION FACTOR.
DEGREES A.P.I.
100
90
80
70
60
50
40
30
20
10
CORRECTION FACTOR (0.055K + 0.35)
1.05
1.00
0.95
0.90
10
11
12
13
K
Cp - BTU/LB. X DEGREE F.
1.100
1.050
1.000
0.950
0.900
0.850
0.800
0.750
0.700
0.650
0.600
0.550
0.500
0.450
0.400
0.350
0
100
200
300
400
500
600
700
800
900
1000
1100
1200
TEMPERATURE - DEGREES F.

FIGURE P-2.2

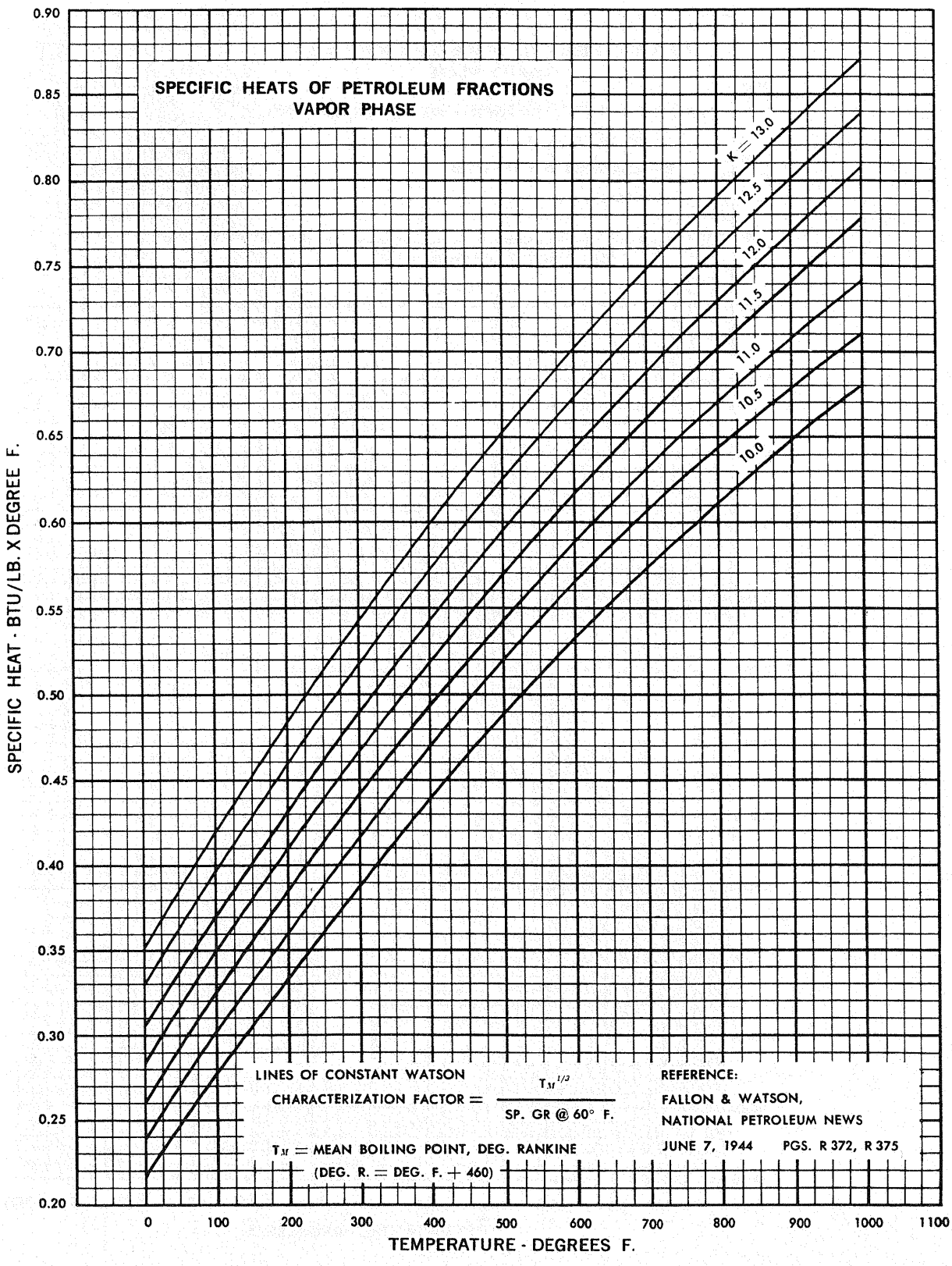
SPECIFIC HEATS OF PETROLEUM FRACTIONS
VAPOR PHASE
K = 13.0
12.5
12.0
11.5
11.0
10.5
10.0
SPECIFIC HEAT - BTU/LB. X DEGREE F.
0.90
0.85
0.80
0.75
0.70
0.65
0.60
0.55
0.50
0.45
0.40
0.35
0.30
0.25
0.20
0
100
200
300
400
500
600
700
800
900
1000
1100
TEMPERATURE - DEGREES F.
LINES OF CONSTANT WATSON CHARACTERIZATION FACTOR = $T_M^{1/3}$ / SP. GR @ 60° F.
T_M = MEAN BOILING POINT, DEG. RANKINE
(DEG. R. = DEG. F. + 460)
REFERENCE:
FALLON & WATSON,
NATIONAL PETROLEUM NEWS
JUNE 7, 1944 PGS. R 372, R 375

FIGURE P-2.3A

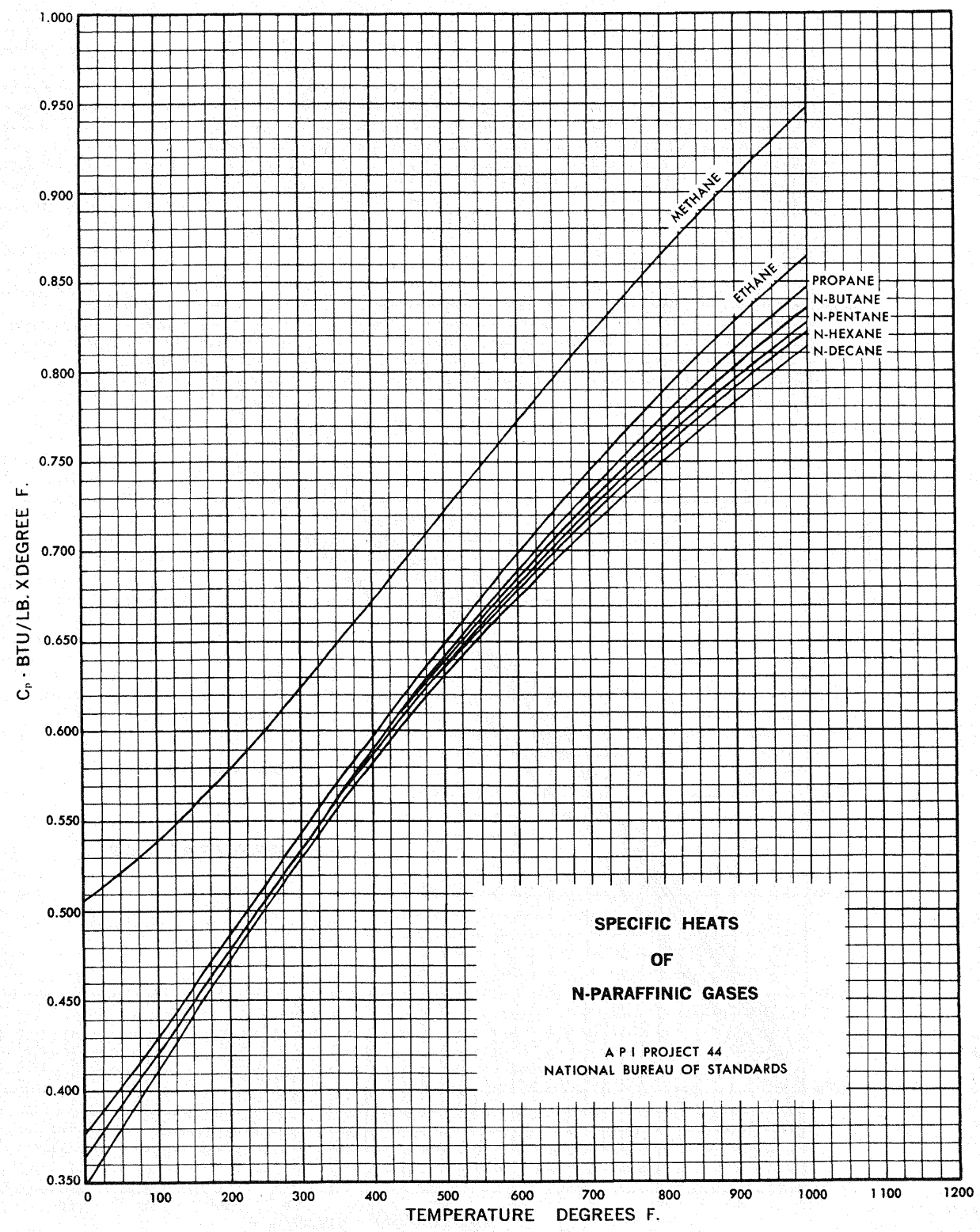
1.000
0.950
0.900
0.850
0.800
0.750
0.700
0.650
0.600
0.550
0.500
0.450
0.400
0.350
C_p - BTU/LB. X DEGREE F.
METHANE
ETHANE
PROPANE
N-BUTANE
N-PENTANE
N-HEXANE
N-DECANE
SPECIFIC HEATS
OF
N-PARAFFINIC GASES
A P I PROJECT 44
NATIONAL BUREAU OF STANDARDS
0
100
200
300
400
500
600
700
800
900
1000
1 100
1200
TEMPERATURE DEGREES F.

FIGURE P-2.3B

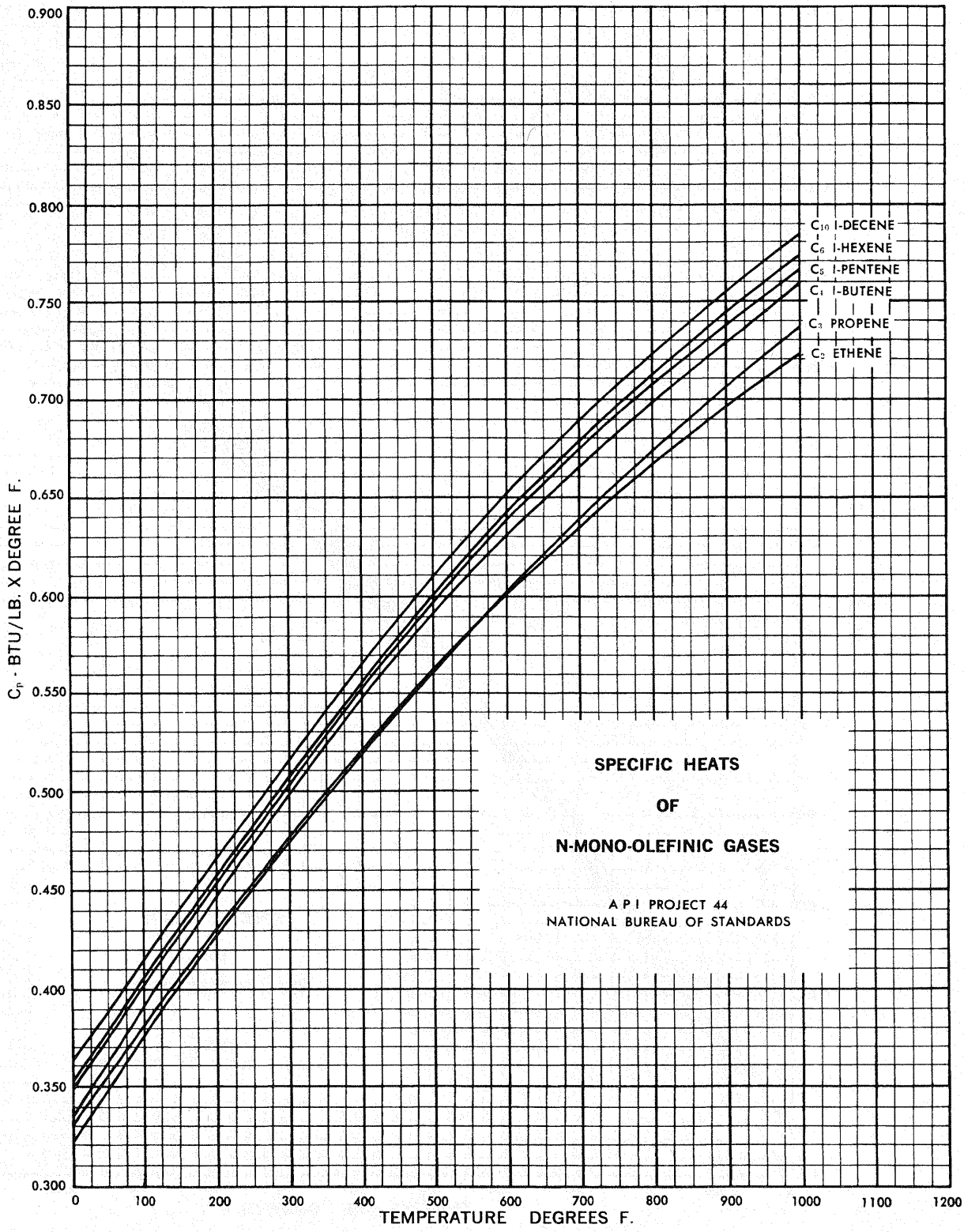
0.900
0.850
0.800
0.750
0.700
0.650
0.600
0.550
0.500
0.450
0.400
0.350
0.300
C_p - BTU/LB. X DEGREE F.
0
100
200
300
400
500
600
700
800
900
1000
1100
1200
TEMPERATURE DEGREES F.
C_{10} 1-DECENE
C_6 1-HEXENE
C_5 1-PENTENE
C_4 1-BUTENE
C_3 PROPENE
C_2 ETHENE
SPECIFIC HEATS
OF
N-MONO-OLEFINIC GASES
A P I PROJECT 44
NATIONAL BUREAU OF STANDARDS

FIGURE P-2.3C

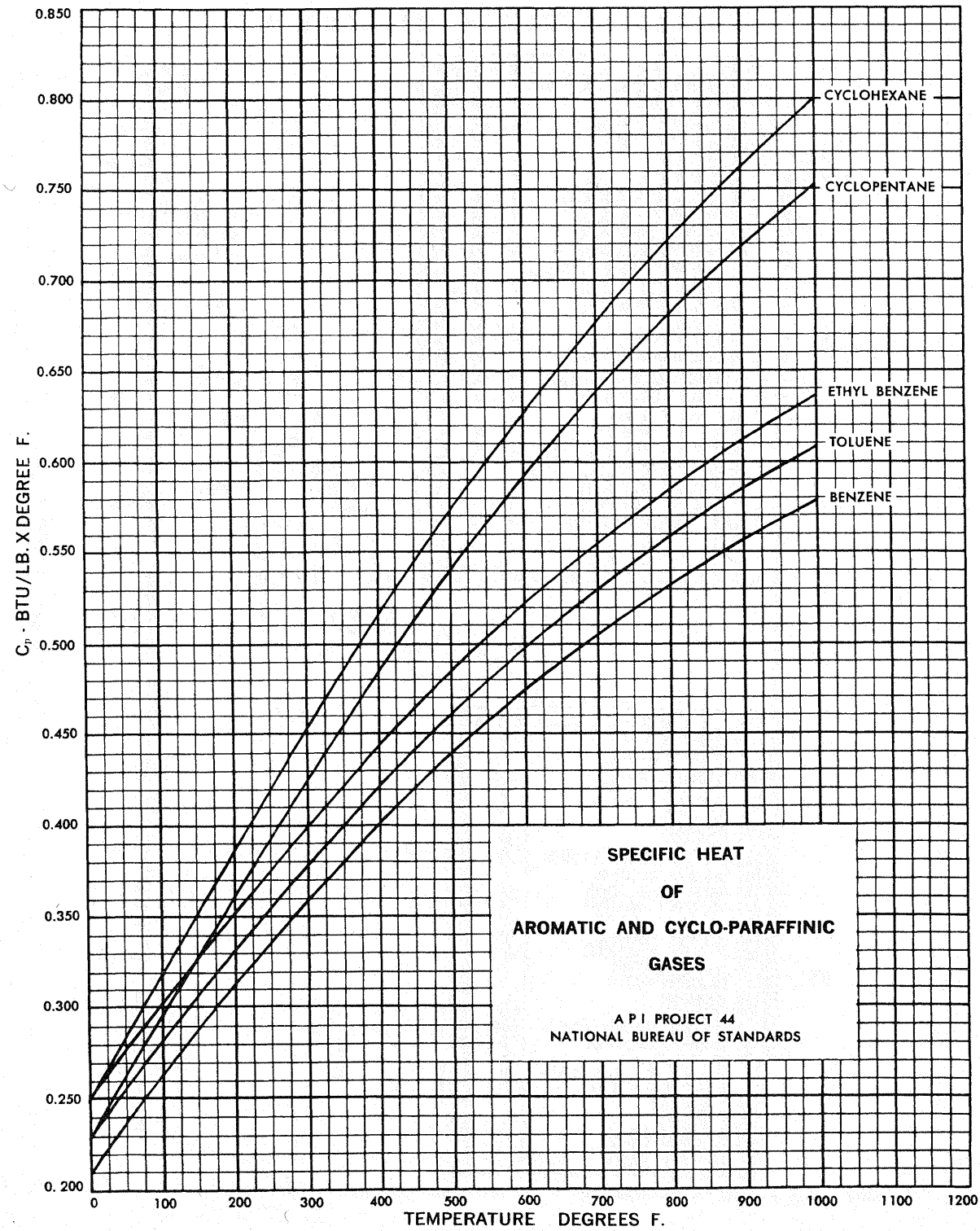
0.850
0.800
0.750
0.700
0.650
0.600
0.550
0.500
0.450
0.400
0.350
0.300
0.250
0. 200
C_p - BTU/LB. X DEGREE F.
0
100
200
300
400
500
600
700
800
900
1000
1100
1200
TEMPERATURE DEGREES F.
CYCLOHEXANE
CYCLOPENTANE
ETHYL BENZENE
TOLUENE
BENZENE
SPECIFIC HEAT
OF
AROMATIC AND CYCLO-PARAFFINIC
GASES
A P I PROJECT 44
NATIONAL BUREAU OF STANDARDS

FIGURE P-2.4A

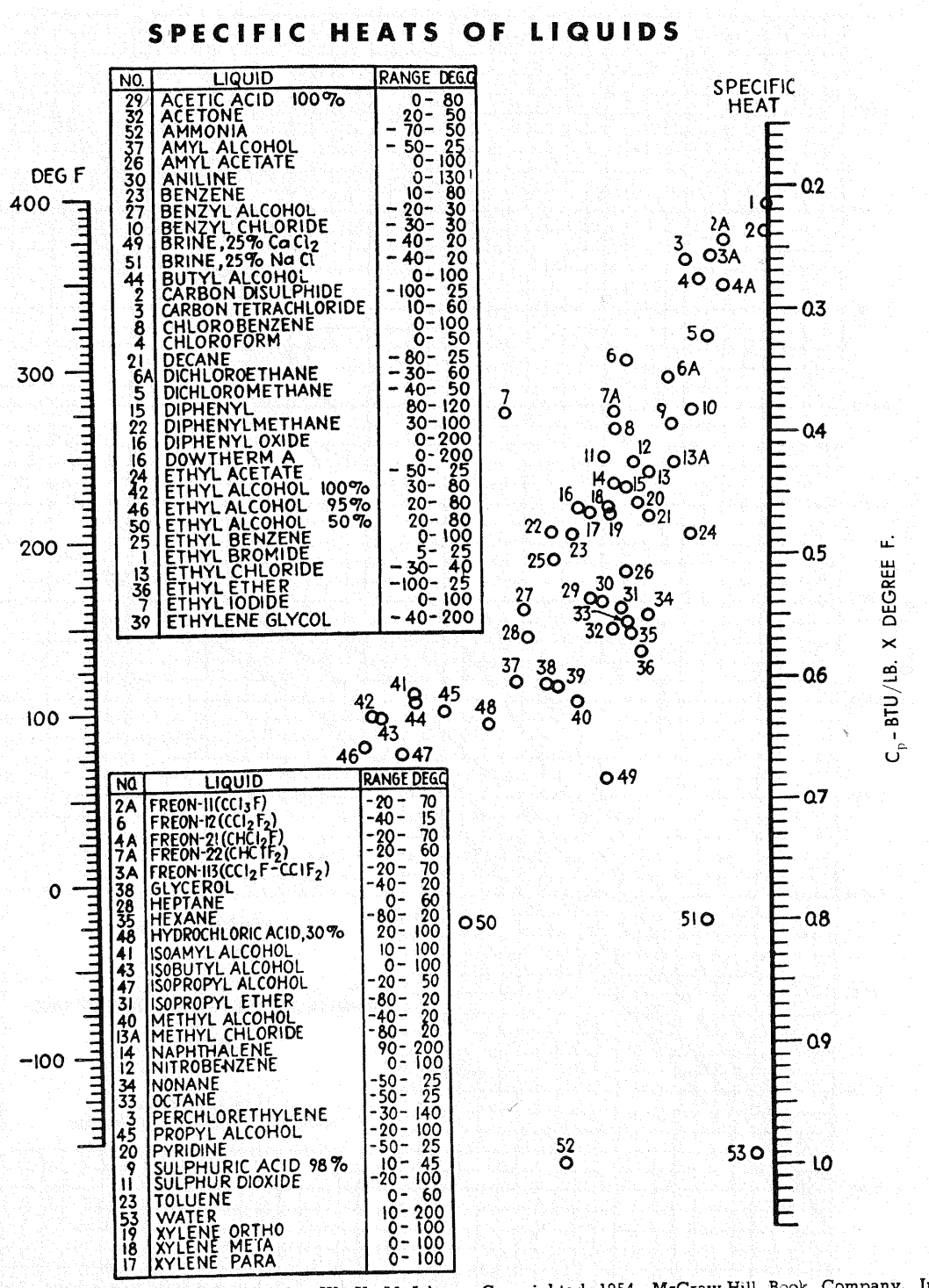

NO.	LIQUID	RANGE DEG.C
29	ACETIC ACID 100%	0 - 80
32	ACETONE	20 - 50
52	AMMONIA	- 70 - 50
37	AMYL ALCOHOL	- 50 - 25
26	AMYL ACETATE	0 - 100
30	ANILINE	0 - 130
23	BENZENE	10 - 80
27	BENZYL ALCOHOL	- 20 - 30
10	BENZYL CHLORIDE	- 30 - 30
49	BRINE, 25% $CaCl_2$	- 40 - 20
51	BRINE, 25% Na Cl	- 40 - 20
44	BUTYL ALCOHOL	0 - 100
2	CARBON DISULPHIDE	- 100 - 25
3	CARBON TETRACHLORIDE	10 - 60
8	CHLOROBENZENE	0 - 100
4	CHLOROFORM	0 - 50
21	DECANE	- 80 - 25
6A	DICHLOROETHANE	- 30 - 60
5	DICHLOROMETHANE	- 40 - 50
15	DIPHENYL	80 - 120
22	DIPHENYLMETHANE	30 - 100
16	DIPHENYL OXIDE	0 - 200
16	DOWTHERM A	0 - 200
24	ETHYL ACETATE	- 50 - 25
42	ETHYL ALCOHOL 100%	30 - 80
46	ETHYL ALCOHOL 95%	20 - 80
50	ETHYL ALCOHOL 50%	20 - 80
25	ETHYL BENZENE	0 - 100
1	ETHYL BROMIDE	5 - 25
13	ETHYL CHLORIDE	- 30 - 40
36	ETHYL ETHER	- 100 - 25
7	ETHYL IODIDE	0 - 100
39	ETHYLENE GLYCOL	- 40 - 200

NO.	LIQUID	RANGE DEG.C
2A	FREON-11 (CCl_3F)	- 20 - 70
6	FREON-12 (CCl_2F_2)	- 40 - 15
4A	FREON-21 ($CHCl_2F$)	- 20 - 70
7A	FREON-22 ($CHClF_2$)	- 20 - 60
3A	FREON-113 ($CCl_2F-CClF_2$)	- 20 - 70
38	GLYCEROL	- 40 - 20
28	HEPTANE	0 - 60
35	HEXANE	- 80 - 20
48	HYDROCHLORIC ACID, 30%	20 - 100
41	ISOAMYL ALCOHOL	10 - 100
43	ISOBUTYL ALCOHOL	0 - 100
47	ISOPROPYL ALCOHOL	- 20 - 50
31	ISOPROPYL ETHER	- 80 - 20
40	METHYL ALCOHOL	- 40 - 20
13A	METHYL CHLORIDE	- 80 - 20
14	NAPHTHALENE	90 - 200
12	NITROBENZENE	0 - 100
34	NONANE	- 50 - 25
33	OCTANE	- 50 - 25
3	PERCHLORETHYLENE	- 30 - 140
45	PROPYL ALCOHOL	- 20 - 100
20	PYRIDINE	- 50 - 25
9	SULPHURIC ACID 98%	10 - 45
11	SULPHUR DIOXIDE	- 20 - 100
23	TOLUENE	0 - 60
53	WATER	10 - 200
19	XYLENE ORTHO	0 - 100
18	XYLENE META	0 - 100
17	XYLENE PARA	0 - 100

By permission from Heat Transmission, by W. H. McAdams. Copyrighted 1954. McGraw-Hill Book Company, Inc.

FIGURE P-2.4B

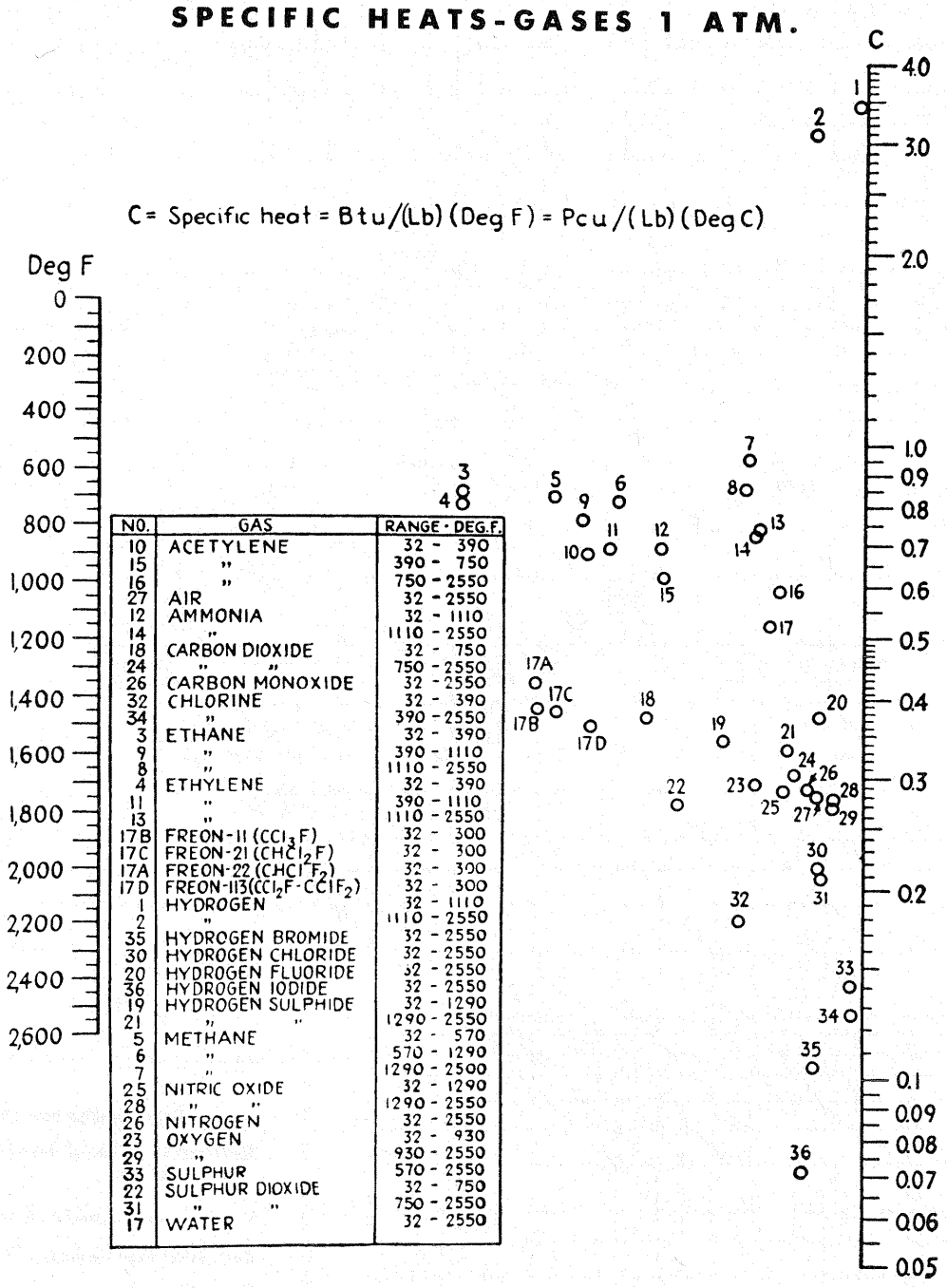

NO.	GAS	RANGE - DEG.F.
10	ACETYLENE	32 - 390
15	"	390 - 750
16	"	750 - 2550
27	AIR	32 - 2550
12	AMMONIA	32 - 1110
14	"	1110 - 2550
18	CARBON DIOXIDE	32 - 750
24	" "	750 - 2550
26	CARBON MONOXIDE	32 - 2550
32	CHLORINE	32 - 390
34	"	390 - 2550
3	ETHANE	32 - 390
9	"	390 - 1110
8	"	1110 - 2550
4	ETHYLENE	32 - 390
11	"	390 - 1110
13	"	1110 - 2550
17B	FREON-11 (CCl_3F)	32 - 300
17C	FREON-21 ($CHCl_2F$)	32 - 300
17A	FREON-22 ($CHClF_2$)	32 - 300
17D	FREON-113 ($CCl_2F-CClF_2$)	32 - 300
1	HYDROGEN	32 - 1110
2	"	1110 - 2550
35	HYDROGEN BROMIDE	32 - 2550
30	HYDROGEN CHLORIDE	32 - 2550
20	HYDROGEN FLUORIDE	32 - 2550
36	HYDROGEN IODIDE	32 - 2550
19	HYDROGEN SULPHIDE	32 - 1290
21	" "	1290 - 2550
5	METHANE	32 - 570
6	"	570 - 1290
7	"	1290 - 2500
25	NITRIC OXIDE	32 - 1290
28	" "	1290 - 2550
26	NITROGEN	32 - 2550
23	OXYGEN	32 - 930
29	"	930 - 2550
33	SULPHUR	570 - 2550
22	SULPHUR DIOXIDE	32 - 750
31	" "	750 - 2550
17	WATER	32 - 2550

By permission from Heat Transmission, by W. H. McAdams. Copyrighted 1954. McGraw-Hill Book Company, Inc.

FIGURE P-2.5

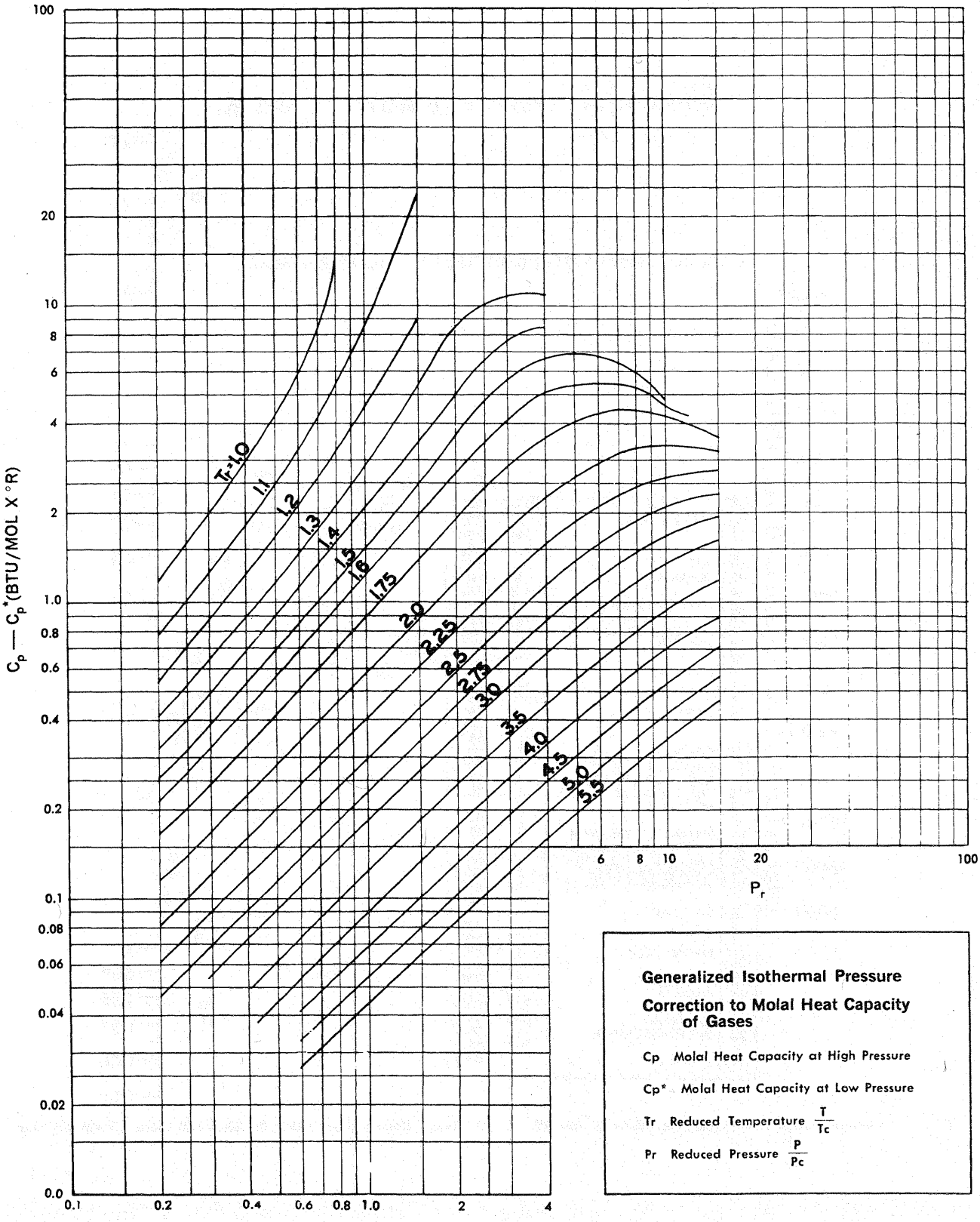

Reprinted by permission from Industrial and Engineering Chemistry, vol. 49, p. 121, 1957. A. H. Weiss and J. Joffe.

FIGURE P-3.1

HEAT CONTENT OF PETROLEUM FRACTIONS INCLUDING THE EFFECT OF PRESSURE

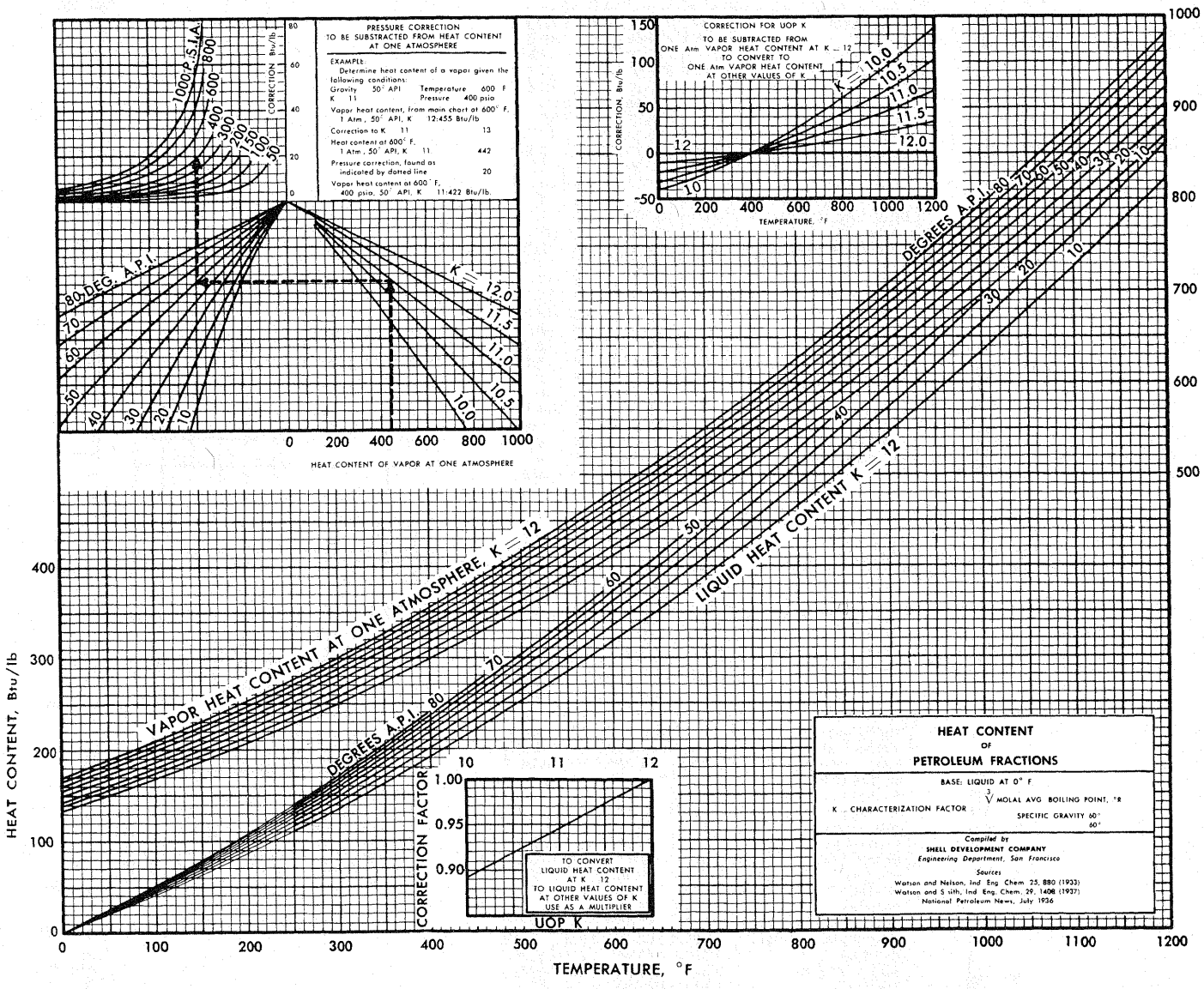

Reprinted by permission of Shell Development Company. Copyright 1945.

FIGURE P-3.2

LATENT HEATS OF VAPORIZATION OF VARIOUS LIQUIDS

LIQUID	t_c °F	Range $t_c - t$ °F	X	Y
Acetic Acid	609	212-392	5.6	11.9
Acetone	455	284-464	4.0	10.3
Ammonia	272	176-392	3.2	3.8
Amyl alcohol (-iso)	585	392-572	6.0	9.4
Benzene	552	50-572	3.6	12.5
Butane (-n)	307	104-158	2.6	11.6
Butane		158-392	3.6	11.7
Butane (-iso)	273	167-345	3.4	12.1
Butyl alcohol (-n)	548	337-572	2.0	9.8
Butyl alcohol (-iso)	508	302-392	1.7	9.7
Butyl alcohol		392-517	6.9	7.7
Butyl alcohol (-sec)	508	337-517	5.6	8.8
Butyl alcohol (-tert)	455	302-392	3.9	9.5
Carbon dioxide	91	50-212	3.3	11.1
Carbon disulfide	522	284-527	3.5	13.7
Carbon tetrachloride	542	50-572	3.6	17.3
Chlorine	291	212-392	1.5	14.5
Chloroform	506	345-508	3.7	15.7
Dichloroethylene (-cie)	468	392-572	9.4	13.3
Dimethyl amine	329	256-392	4.8	8.8
Diphenyl	982	50- 90	2.2	15.2
Diphenyl		90-302	3.8	15.2
Diphenyl		302-752	0.8	12.8
Diphenyl oxide	952	176-643	3.1	15.5
Diphenyl oxide		643-932	6.2	14.5
Ethane	895	50-266	4.0	9.8
Ethyl alcohol	470	50-284	3.1	7.0
Ethyl alcohol		285-482	4.7	6.3
Ethyl amine	362	266-446	3.9	9.0
Ethyl chloride	369	302-446	4.1	12.2
Ethylene	50	50-122	3.0	9.3
Ethylene		122-256	4.0	0.6
Ethyl ether	382	59-266	3.1	12.7
Ethyl ether		266-464	1.8	12.7
Freon-11 (CCl_3F)	388	158-482	3.6	17.3
Freon-12 (CCl_2F_2)	232	140-302	3.9	17.2
Freon-21 ($CHCl_2F$)	325	176-427	3.3	15.4
Freon-22 ($CHClF_2$)	205	122-320	4.0	15.1
Freon-113 (CCl_2FCClF_2)	417	194-482	3.5	18.7
Freon-114 ($CClF_2CClF_2$)	293	113-392	3.5	18.7
Heptane (-n)	512	50.517	3.4	13.5
Hexane (-n)	456	131-464	3.4	13.2
Methane	116	50-194	5.2	8.3
Methyl alcohol	464	68-285	3.3	5.3
Methyl alcohol		283-464	3.6	4.7
Methyl amine	315	212-392	4.1	6.5
Methyl chloride	289	61-230	2.6	11.1
Methyl chloride		230-247	5.2	11.2
Methyl formate	417	302-482	1.9	11.3
Methylene chloride	421	302-482	1.0	13.7
Nitrous oxide	97	43- 77	1.2	9.2
Nitrous oxide		77-256	5.6	12.3
Octane (-n)	565	61-572	3.6	13.8
Pentane (-n)	386	59-482	3.3	12.7
Pentane (-iso)	370	50-392	3.2	12.7
Propane	205	59-482	4.3	11.0
Propyl alcohol (-n)	507	77-517	2.1	8.8
Propyl alcohol (-iso)	456	302-482	3.5	8.3
Pyridine	652	446-661	2.3	12.5
Sulfur dioxide	314	212-392	2.0	12.3
Toluene	611	212-572	1.5	13.7
Trichloroethylene	520	355-582	6.0	15.9
Water	707	50-675	3.0	1.0

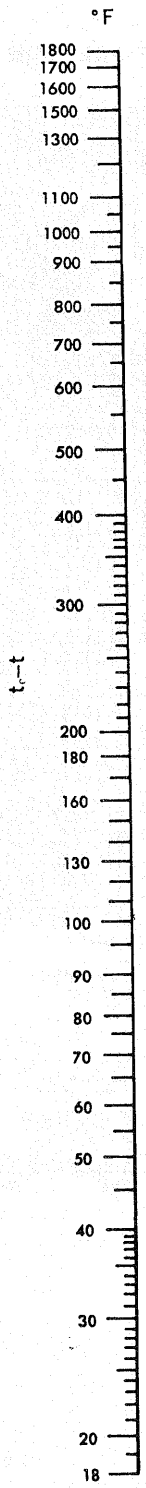

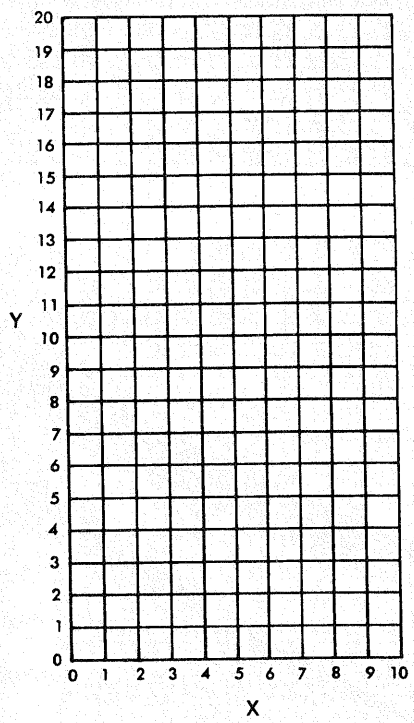

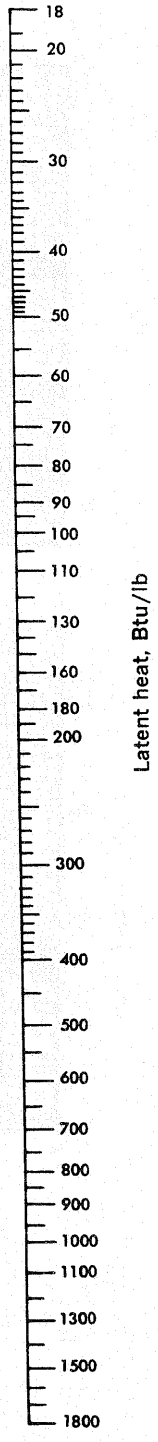

Example:—For water at 212°F, $t_c - t = 707\text{-}212 = 495$ and the latent heat per lb is 970 Btu

(Latent heat accurate within ± 10 per cent)

From "Process Heat Transfer," 1st Ed., Donald Q. Kern; McGraw-Hill Book Company, reprinted by permission.

TABLE P-3.3
HEAT CAPACITY RATIOS (C_p / C_v)

Acetylene	1.26
Air	1.403
Ammonia	1.310
Argon	1.688
Benzene	1.10 (200 ° F)
Carbon Dioxide	1.304
Chlorine	1.355
Dichlorodiflouromethane	1.139 (77 ° F)
Ethane	1.22
Ethyl Alcohol	1.13 (200 ° F)
Ethyl Ether	1.08 (95 ° F)
Ethylene	1.255
Helium	1.660 (-292 ° F)
Hexane (n-)	1.08 (176 ° F)
Hydrogen	1.410
Methane	1.31
Methyl Alcohol	1.203 (171 ° F)
Nitrogen	1.404
Oxygen	1.401
Pentane (n-)	1.086 (189 ° F)
Sulfur Dioxide	1.29

(All values at 60 ° F and one atmosphere unless otherwise noted)

TABLE P-4.1

THERMAL CONDUCTIVITY CONVERSION FACTORS

To convert the numerical value of a property expressed in one of the units in the left-hand column of the table to the numerical value expressed in one of the units in the top row of the table, multiply the former value by the factor in the block common to both units.

	$\frac{\text{Btu}}{\text{hr—sq ft—deg F per in.}}$	$\frac{\text{Btu}}{\text{hr—sq ft—deg F per ft}}$	$\frac{\text{cal}}{\text{sec—sq cm—deg C per cm}}$	$\frac{\text{kg-cal}}{\text{hr—sq m—deg C per m}}$	$\frac{\text{watts}}{\text{sq cm—deg C per cm}}$
$\frac{\text{Btu}}{\text{hr—sq ft—deg F per in.}}$	1	0.08333	3.445×10^{-4}	0.1240	1.422×10^{-3}
$\frac{\text{Btu}}{\text{hr—sq ft—deg F per ft}}$	12.00	1	4.134×10^{-3}	1.488	0.01731
$\frac{\text{cal}}{\text{sec—sq cm—deg C per cm}}$	2,903	241.9	1	360	4.187
$\frac{\text{kg-cal}}{\text{hr—sq m—deg C per m}}$	8.064	0.6720	2.778×10^{-3}	1	0.01163
$\frac{\text{watts}}{\text{sq cm—deg C per cm}}$	693.4	57.78	0.2388	85.99	1

FIGURE P-4.2

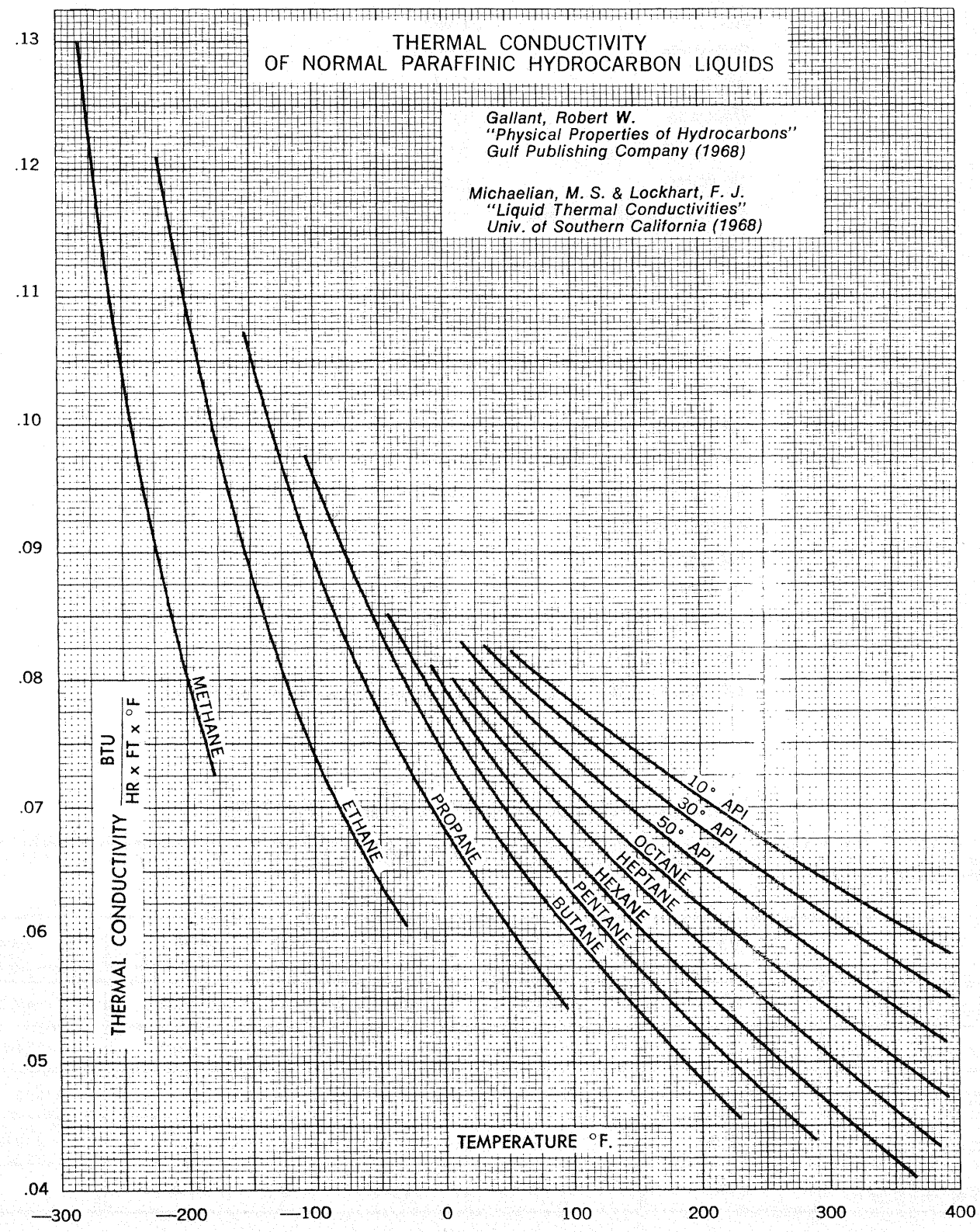
THERMAL CONDUCTIVITY
OF NORMAL PARAFFINIC HYDROCARBON LIQUIDS
Gallant, Robert W.
"Physical Properties of Hydrocarbons"
Gulf Publishing Company (1968)
Michaelian, M. S. & Lockhart, F. J.
"Liquid Thermal Conductivities"
Univ. of Southern California (1968)
THERMAL CONDUCTIVITY BTU / HR x FT x °F
TEMPERATURE °F.
.13
.12
.11
.10
.09
.08
.07
.06
.05
.04
—300
—200
—100
0
100
200
300
400
METHANE
ETHANE
PROPANE
BUTANE
PENTANE
HEXANE
HEPTANE
OCTANE
10° API
30° API
50° API

FIGURE P-4.3A

THERMAL CONDUCTIVITY OF LIQUIDS

k = B.t.u./(hr.)(sq. ft.)(°F./ft.)

A linear variation with temperature may be assumed. The extreme values given constitute also the temperature limits over which the data are recommended.

Liquid	T, °F.	k
Acetic Acid	68	.092
	300	.078
Acetone	0	.093
	170	.076
Acetylene	−220	.137
	−110	.089
	32	.057
Acrylic Acid	32	.144
	100	.124
	320	.086
Allyl Alcohol	68	.095
	212	.092
Amyl Alcohol	68	.089
	212	.085
Aniline	68	.133
	300	.089
Benzene	68	.085
	320	.059
Bromobenzene	32	.065
	390	.059
Butyl Acetate (N)	32	.082
	320	.056
Butyl Alcohol (ISO)	−40	.100
	50	.087
	160	.077
	300	.075
Butyl Alcohol (N)	−40	.104
	300	.064
Carbon Disulfide	−112	.084
	68	.072
Carbon Tetrachloride	−112	.071
	212	.052
Chlorobenzene	32	.075
	390	.068
Chloroform	−100	.083
	212	.056
Cumene	32	.075
	390	.050
Cyclohexane	40	.089
	100	.081
	250	.060
Dichlorodifluoromethane	−80	.066
	50	.063
	140	.058
Ethyl Acetate	32	.088
	230	.065
Ethyl Alcohol	−40	.110
	300	.080
Ethyl Benzene	32	.080
	390	.045
Formaldehyde	−110	.185
	0	.132
	68	.116
Glycerine	68	.161
	390	.181
Heptane (N)	50	.074
	300	.050
Hexane (N)	50	.072
	300	.046
Heptyl Alcohol	68	.077
	280	.071
Hexyl Alcohol	68	.077
	250	.074
Methylethyl-Ketone (MEK)	0	.089
	250	.067
Methyl Alcohol (Methanol)	−22	.132
	300	.096
Nonane (N)	50	.077
	300	.056
Octane	50	.076
	300	.054
Para Xylene	68	.076
	176	.065
	390	.047
Pentane	50	.069
	250	.048
Propyl Alcohol (N)	−40	.106
	300	.072
Propyl Alcohol (ISO)	−40	.092
	140	.075
	300	.072
Toluene	32	.083
	390	.050
Trichloroethylene	−40	.084
	86	.065
	300	.046
Vinyl Acetate	32	.088
	230	.065
Water	32	.343
	100	.363
	200	.383
	300	.395
	420	.376
	620	.275
Xylene (Ortho)	32	.087
	176	.068
	390	.048
Xylene (Meta)	32	.080
	176	.062
	390	.044

Extracted from "Physical Properties of Hydrocarbons"
By R. W. Gallant, Copyright 1968, Gulf Publishing Co.

FIGURE P-4.3B

THERMAL CONDUCTIVITIES OF GASES AND VAPORS

[k = BTU/(hr)(sq ft)(deg. F per ft)]

Substance	TEMPERATURE °F.							
	—328	—148	32	122	212	392	572	752
Acetone			.0057	.0076	.0099	.0157		
Acetylene		.0056	.0108	.0140	.0172			
Air	.0040	.0091	.0140		.0184	.0224	.0260	
Ammonia		.0097*	.0126		.0192	.0280	.0385	.0509
Argon		.0063	.0095		.0123	.0148	.0171	
Benzene			.0052	.0075	.0103	.0166		
Butane (n-)			.0078		.0135			
Butane (iso-)			.0080		.0139			
Carbon dioxide		.0064*	.0084		.0128	.0177	.0229	
Carbon disulfide			.0040					
Carbon monoxide	.0037	.0088	.0134		.0176			
Carbon tetrachloride				.0042	.0052	.0068		
Chlorine			.0043					
Chloroform			.0038	.0047	.0058	.0081		
Cyclohexane					.0094			
Dichlorodifluoromethane			.0048	.0064	.0080	.0115		
Ethane		.0055	.0106		.0175			
Ethyl acetate				.0074	.0096	.0150		
Ethyl alcohol			.0081		.0124			
Ethyl chloride			.0055		.0095	.0145		
Ethyl ether			.0077	.0101	.0131	.0200		
Ethylene		.0051	.0101	.0131	.0161			
Helium	.0338	.0612	.0818		.0988			
Heptane (n-)					.0103	.0112		
Hexane (n-)			.0072	.0080†				
Hexene			.0061		.0109			
Hydrogen	.0293	.0652	.0966		.1240	.1484	.1705	
Hydrogen sulfide			.0076					
Mercury						.0197		
Methane	.0045	.0109	.0176		.0255	.0358	.0490	
Methyl acetate			.0059	.0068†				
Methyl alcohol			.0083		.0128			
Methyl chloride			.0053	.0074	.0094	.0140		
Methylene chloride			.0039	.0050	.0063	.0091		
Neon			.0026					
Nitric oxide		.0089	.0138	.0161				
Nitrogen	.0040	.0091	.0139		.0181	.0220	.0255	.0287
Nitrous oxide		.0047	.0088		.0138			
Oxygen	.0038	.0091	.0142	.0166	.0188			
Pentane (n-)			.0074	.0083†				
Pentane (iso-)			.0072		.0127			
Propane			.0087		.0151			
Sulfur dioxide			.0050		.0069			
Water vapor, zero pressure					.0136	.0182	.0230	.0279

* Value at — 58° F.

† Value at 68° F.

Adapted from Heat Transmission, by W. H. McAdams. Copyrighted 1954. McGraw-Hill Book Company, Incorporated.

FIGURE P-4.4A

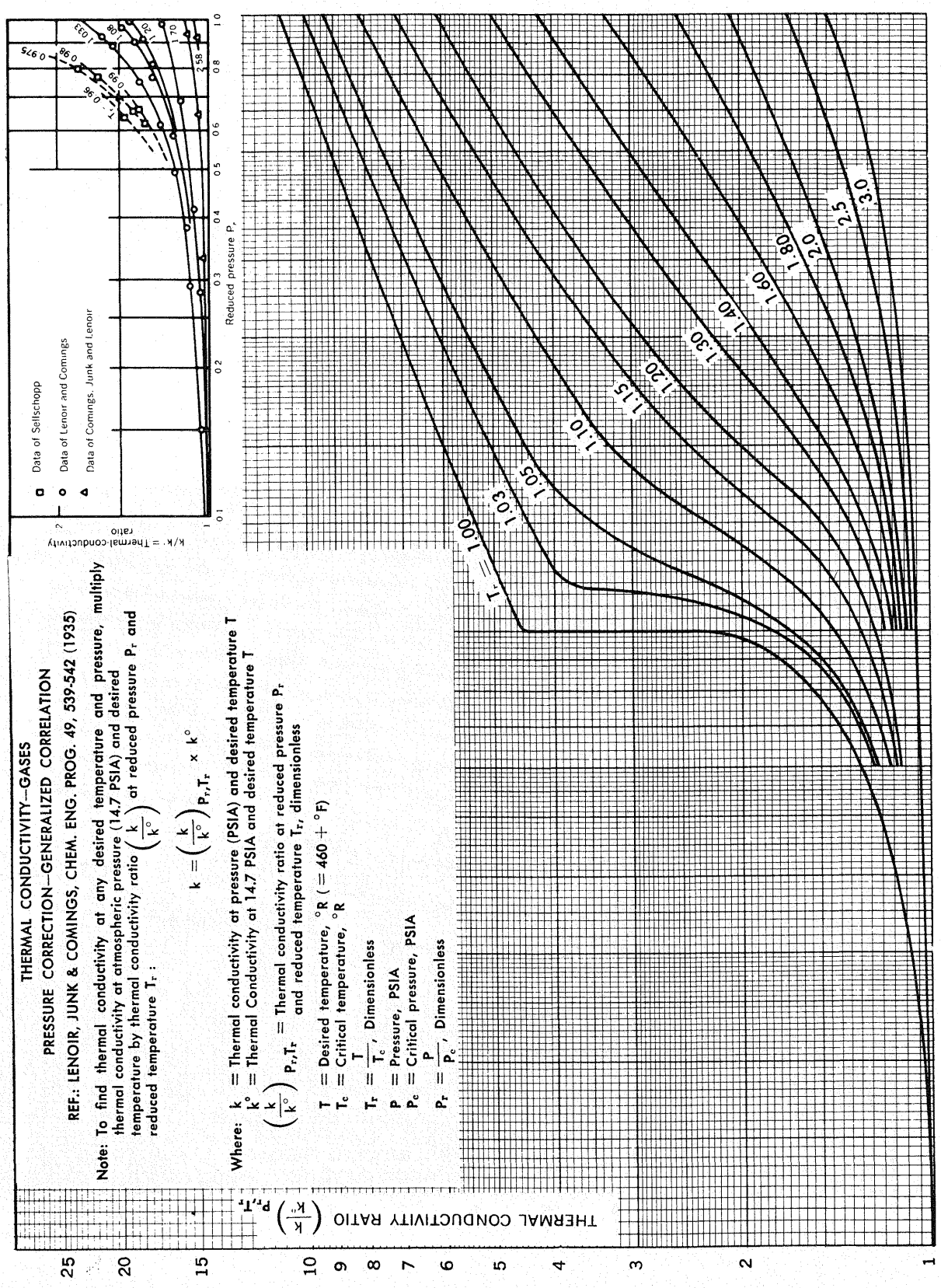
THERMAL CONDUCTIVITY—GASES
PRESSURE CORRECTION—GENERALIZED CORRELATION
REF.: LENOIR, JUNK & COMINGS, CHEM. ENG. PROG. 49, 539-542 (1935)
Note: To find thermal conductivity at any desired temperature and pressure, multiply thermal conductivity at atmospheric pressure (14.7 PSIA) and desired temperature by thermal conductivity ratio $\left(\frac{k}{k^\circ}\right)$ at reduced pressure P_r and reduced temperature T_r :
$k = \left(\frac{k}{k^\circ}\right)_{P_r,T_r} \times k^\circ$
Where: k = Thermal conductivity at pressure (PSIA) and desired temperature T
k° = Thermal Conductivity at 14.7 PSIA and desired temperature T
$\left(\frac{k}{k^\circ}\right)_{P_r,T_r}$ = Thermal conductivity ratio at reduced pressure P_r and reduced temperature T_r, dimensionless
T = Desired temperature, °R (= 460 + °F)
T_c = Critical temperature, °R
$T_r = \frac{T}{T_c}$, Dimensionless
P = Pressure, PSIA
P_c = Critical pressure, PSIA
$P_r = \frac{P}{P_c}$, Dimensionless
THERMAL CONDUCTIVITY RATIO $\left(\frac{\kappa}{\kappa^\circ}\right)_{P_r,T_r}$
Reduced pressure P_r
T_r = 1.00, 1.03, 1.05, 1.10, 1.15, 1.20, 1.30, 1.40, 1.60, 1.80, 2.0, 2.5, 3.0
k/k° = Thermal-conductivity ratio
Data of Sellschopp
Data of Lenoir and Comings
Data of Comings, Junk and Lenoir
Reduced pressure P_r

FIGURE P-4.4B

THERMAL CONDUCTIVITY—LIQUIDS
PRESSURE CORRECTION—GENERALIZED CORRELATION

REF.: LENOIR, J. M., PET. REF. 36, 162-164 (1957)

Note: To find thermal conducticity k_2 at pressure P_2 and temperature T, multiply known value k_1 by ratio $\left(\frac{e_2}{e_1}\right)$

$$k_2 = k_1 \left(\frac{e_2}{e_1}\right)$$

Where: k_1 = Known thermal conductivity at any pressure P_1 and temperature T
k_2 = Desired thermal conductivity at P_2 and T
e_1 = Thermal conductivity factor at $(P_r)_1$ and T_r
e_2 = Thermal conductivity factor at $(P_r)_2$ and T_r
P_1 and P_2 = Pressures, PSIA
P_c = Critical Pressure, PSIA
$(P_r)_1 = P_1/P_c$, Dimensionless
$(P_r)_2 = P_2/P_c$, Dimensionless
T = Temperature, °R (= 460 + °F)
T_c = Critical temperature, °R
$T_r = T/T_c$, dimensionless

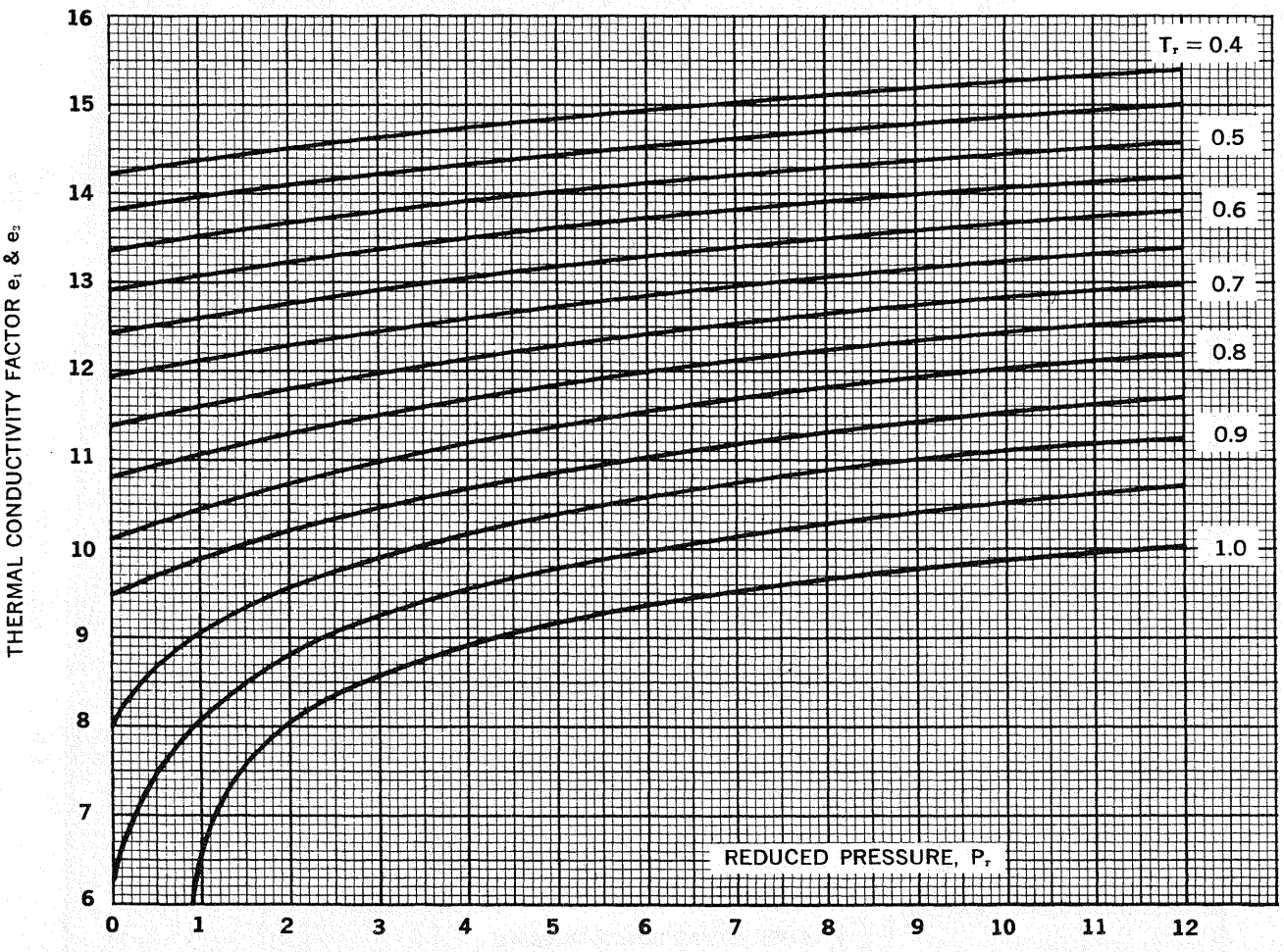

TABLE P-5.1

VISCOSITY CONVERSION FACTORS

	centipoises	poises = $\frac{gm}{cm\text{-}sec}$	$\frac{lb}{ft\text{-}sec}$	$\frac{lb\text{-}sec}{ft^2}$	$\frac{lb}{ft\text{-}hr}$	$\frac{kg\text{-}sec}{m^2}$
centipoises	1	.01	.000672	.0000209	2.42	.000102
poises = $\frac{gm}{cm\text{-}sec}$	100	1	.0672	.00209	242	.0102
$\frac{lb}{ft\text{-}sec}$	1488	14.88	1	.0311	3600	.1517
$\frac{lb\text{-}sec}{ft^2}$	47900	479	32.2	1	116000	4.88
$\frac{lb}{ft\text{-}hr}$	.413	.00413	.000278	.00000864	1	.0000421
$\frac{kg\text{-}sec}{m^2}$	9810	98.1	6.59	.2048	23730	1

To convert the numerical value of a property expressed in one of the units in the left-hand column of the table to the numerical value expressed in one of the units in the top row of the table, multiply the former value by the factor in the block common to both units.

FIGURE P-5.1

VISCOSITY CONVERSION PLOT

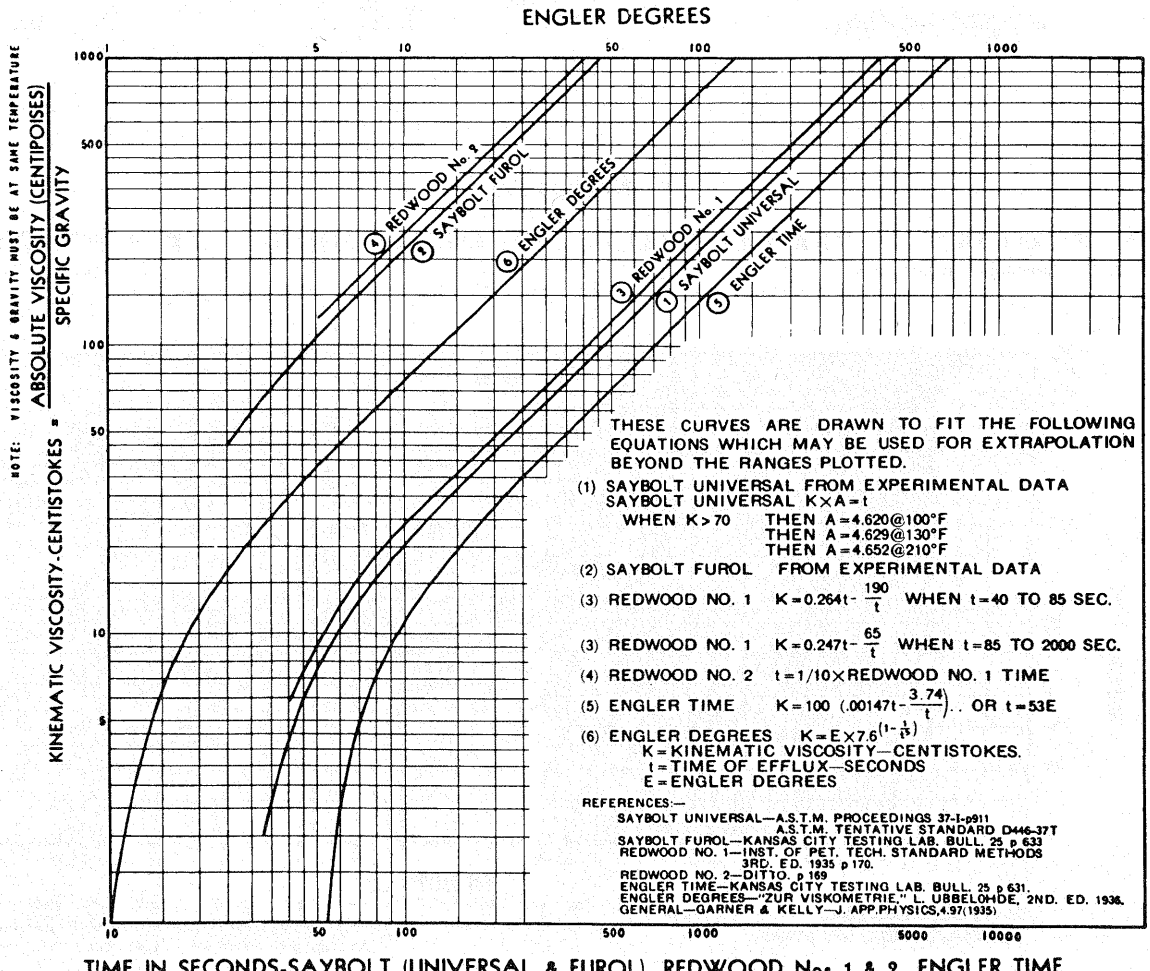

FIGURE P-5.2A

VISCOSITY — TEMPERATURE RELATIONSHIP FOR PETROLEUM OILS

LINES OF CONSTANT DEGREES A.P.I. CHARACTERIZATION FACTOR, K = 10.0

Ref: Watson, Wien & Murphy, Industrial & Engineering Chemistry 28,605-9 (1936)

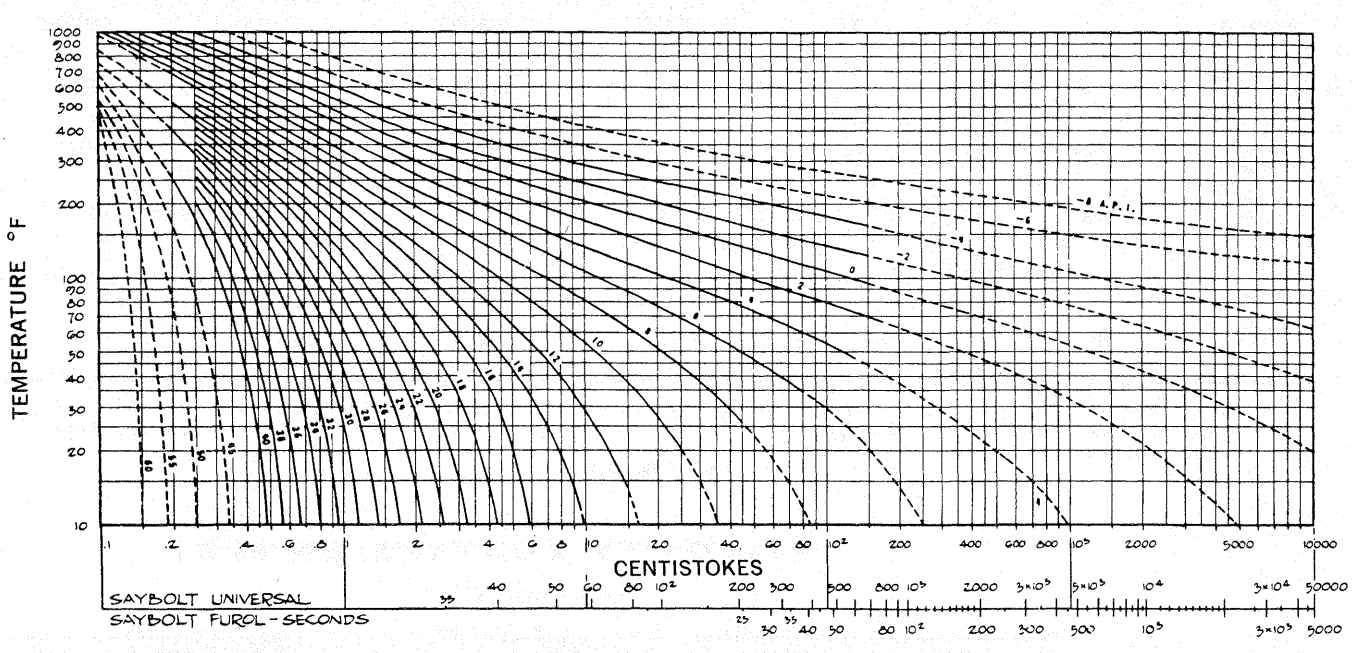

FIGURE P-5.2B

VISCOSITY — TEMPERATURE RELATIONSHIP FOR PETROLEUM OILS

LINES OF CONSTANT DEGREES A.P.I. CHARACTERIZATION FACTOR, K = 11.0

Ref: Watson, Wien & Murphy, Industrial & Engineering Chemistry 28,605-9 (1936)

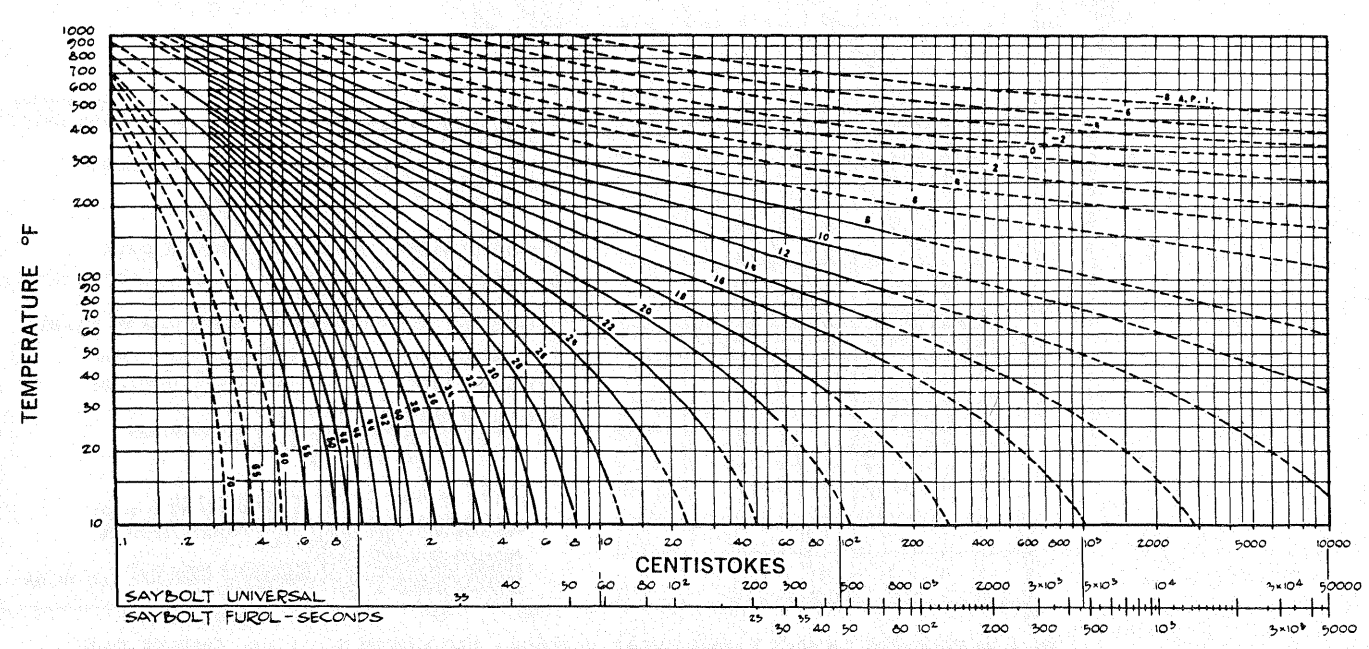

FIGURE P-5.2C

VISCOSITY — TEMPERATURE RELATIONSHIP FOR PETROLEUM OILS

LINES OF CONSTANT DEGREES A.P.I. CHARACTERIZATION FACTOR, K = 11.8

Ref: Watson, Wien & Murphy, Industrial & Engineering Chemistry 28,605-9 (1936)

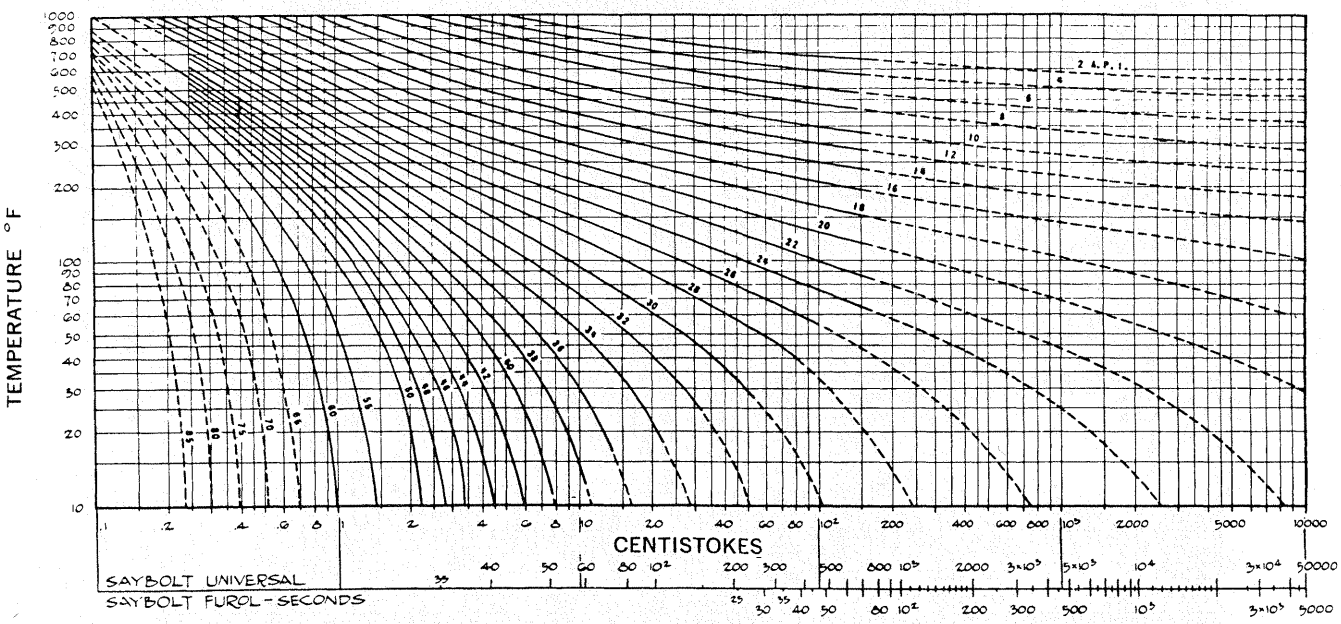

FIGURE P-5.2D

VISCOSITY — TEMPERATURE RELATIONSHIP FOR PETROLEUM OILS

LINES OF CONSTANT DEGREES A.P.I. CHARACTERIZATION FACTOR, K = 12.5

Ref: Watson, Wien & Murphy, Industrial & Engineering Chemistry 28,605-9 (1936)

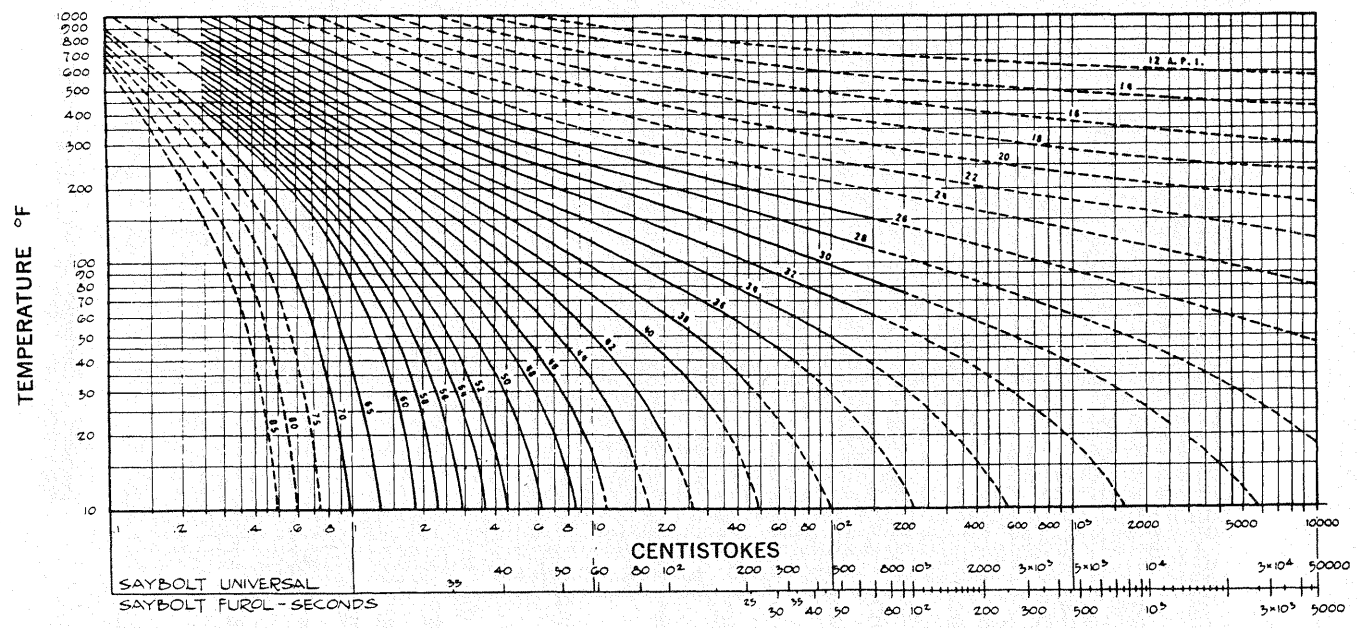

FIGURE P-5.3A

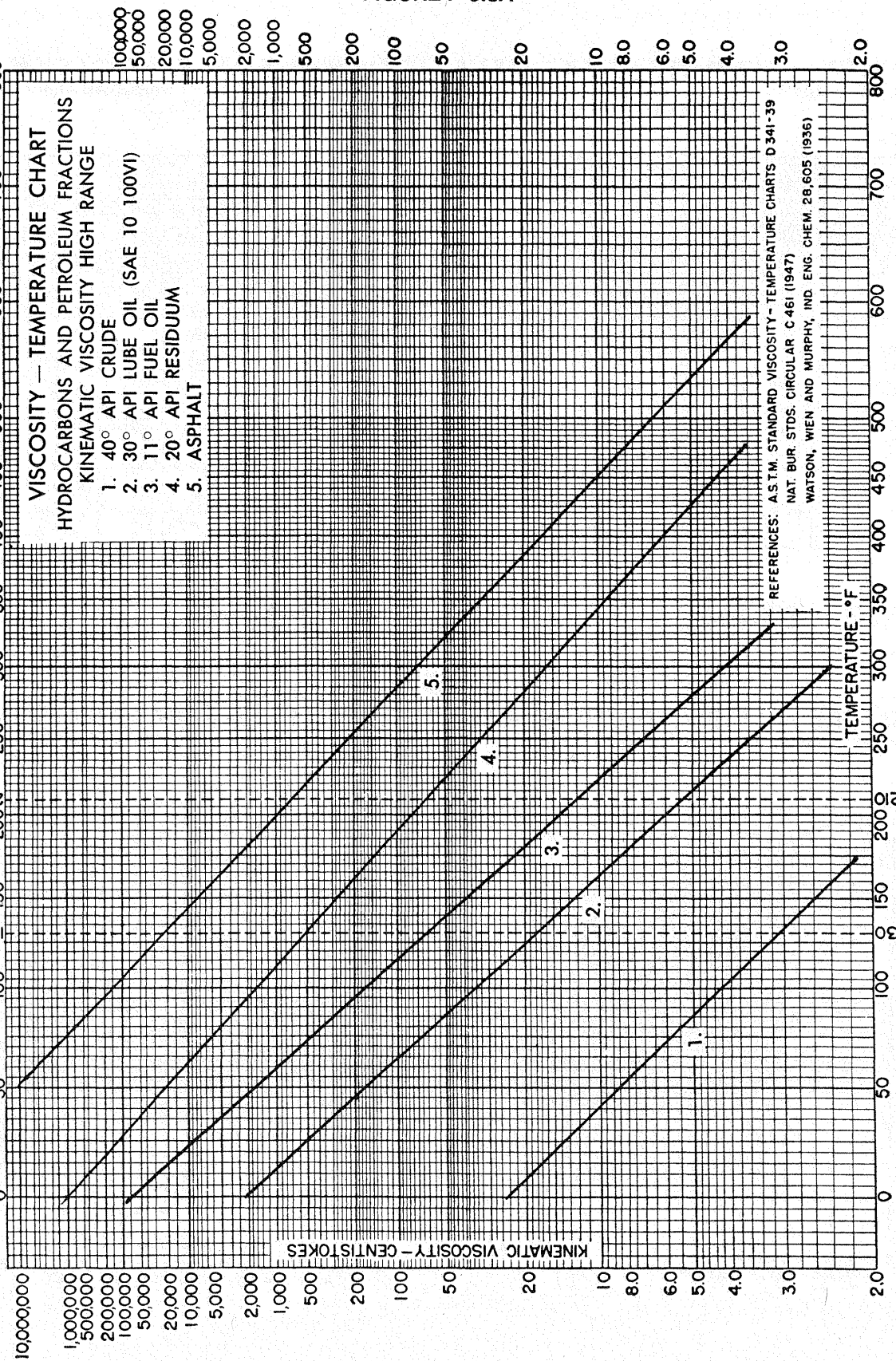

Reprinted by permission of the copyright owner, Esso Research and Engineering Co., Linden, N. J., from "Data Book on Hydrocarbons," by J. B. Maxwell, D. Van Nostrand Company, New York, 1950.

FIGURE P-5.3B

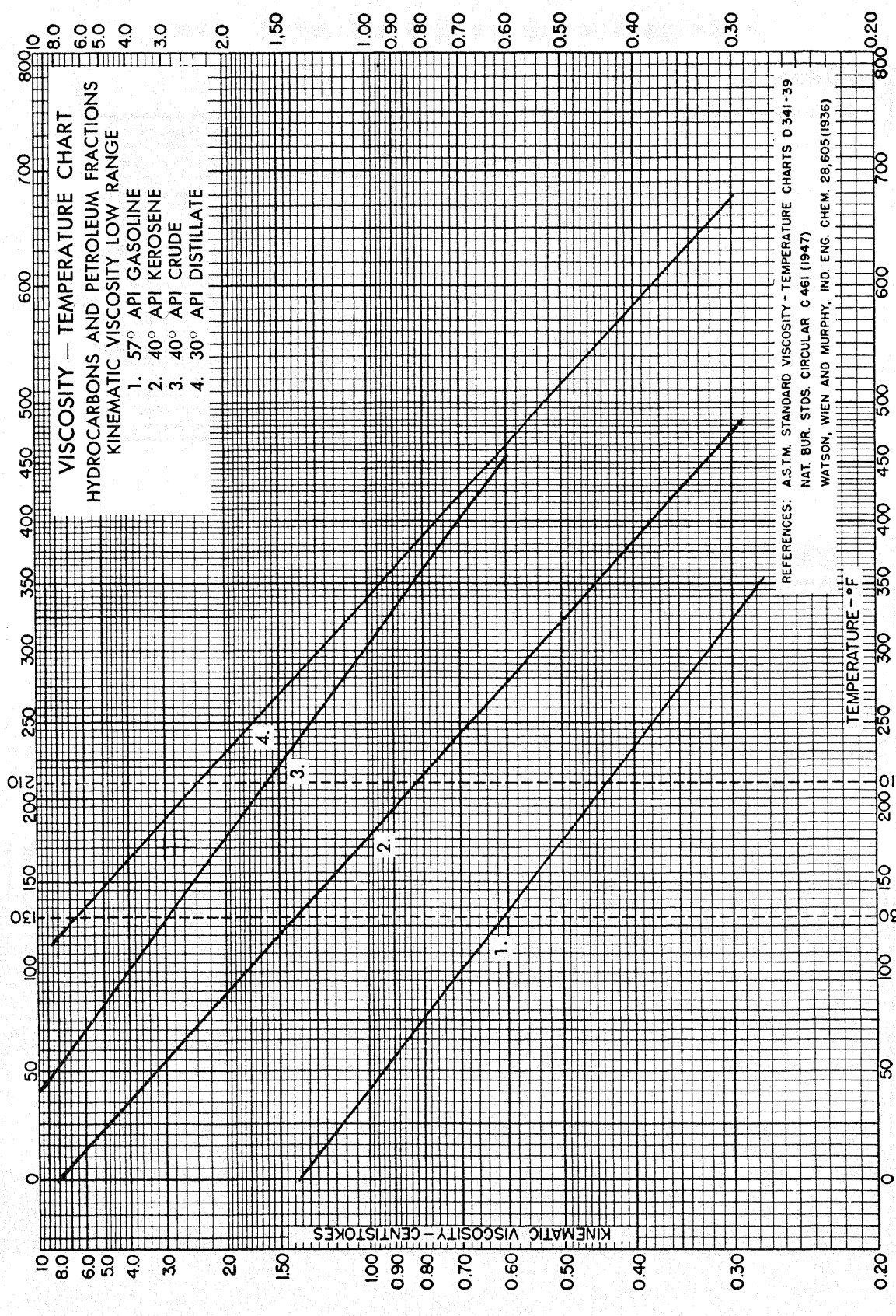

Reprinted by permission of the copyright owner, Esso Research and Engineering Co., Linden, N. J., from "Data Book on Hydrocarbons," by J. B. Maxwell, D. Van Nostrand Company, New York, 1950.

FIGURE P-5.4A

VISCOSITIES OF LIQUIDS AT 1 ATM.

No.	Liquid	X	Y	No.	Liquid	X	Y
1	Acetaldehyde	15.2	4.8	56	Freon-22	17 2	4.7
2	Acetic acid, 100 %	12.1	14.2	57	Freon-113	12.5	11.4
3	Acetic acid, 70 %	9.5	17.0	58	Glycerol, 100 %	2.0	30.0
4	Acetic anhydride	12.7	12.8	59	Glycerol, 50 %	6.9	19.6
5	Acetone, 100 %	14.5	7.2	60	Heptene	14.1	8.4
6	Acetone, 35 %	7.9	15.0	61	Hexane	14.7	7.0
7	Allyl alcohol	10.2	14.3	62	Hydrochloric acid, 31.5 %	13.0	16.6
8	Ammonia, 100 %	12.6	2.0	63	Isobutyl alcohol	7.1	18.0
9	Ammonia, 26 %	10.1	13.9	64	Isobutyric acid	12.2	14.4
10	Amyl acetate	11.8	12.5	65	Isopropyl alcohol	8.2	16.0
11	Amyl alcohol	7.5	18.4	66	Kerosene	10.2	16.9
12	Aniline	8.1	18.7	67	Linseed oil, raw	7.5	27.2
13	Anisole	12.3	13.5	68	Mercury	18.4	16.4
14	Arsenic trichloride	13.9	14.5	69	Methanol, 100 %	12.4	10.5
15	Benzene	12.5	10.9	70	Methanol, 90 %	12.3	11.8
16	Brine, $CaCl_2$, 25 %	6.6	15.9	71	Methanol, 40 %	7.8	15.5
17	Brine, NaCl, 25 %	10.2	16.6	72	Methyl acetate	14.2	8.2
18	Bromine	14.2	13.2	73	Methyl chloride	15.0	3.8
19	Bromotoluene	20.0	15.9	74	Methyl ethyl ketone	13.9	8.6
20	Butyl acetate	12.3	11.0	75	Naphthalene	7.9	18.1
21	Butyl alcohol	8.6	17.2	76	Nitric acid, 95 %	12.8	13.8
22	Butyric acid	12.1	15.3	77	Nitric acid, 60 %	10.8	17.0
23	Carbon dioxide	11.6	0.3	78	Nitrobenzene	10.6	16.2
24	Carbon disulphide	16.1	7.5	79	Nitrotoluene	11.0	17.0
25	Carbon tetrachloride	12.7	13.1	80	Octane	13.7	10.0
26	Chlorobenzene	12.3	12.4	81	Octyl alcohol	6.6	21.1
27	Chloroform	14.4	10.2	82	Pentachloroethane	10.9	17.3
28	Chlorosulfonic acid	11.2	18.1	83	Pentane	14.9	5.2
29	Chlorotoluene, ortho	13.0	13.3	84	Phenol	6.9	20.8
30	Chlorotoluene, meta	13.3	12.5	85	Phosphorus tribromide	13.8	16.7
31	Chlorotoluene para	13.3	12.5	86	Phosphorus trichloride	16.2	10.9
32	Creol, meta	2.5	20.8	87	Propionic acid	12.8	13.8
33	Cyclohexanol	2.9	24.3	88	Propyl alcohol	9.1	16.5
34	Dibromoethane	12.7	15.8	89	Propyl bromide	14.5	9.6
35	Dichloroethane	13.2	12.2	90	Propyl chloride	14.4	7.5
36	Dichloromethane	14.6	8.9	91	Propyl iodide	14.1	11.6
37	Diethyl oxalate	11.0	16.4	92	Sodium	16.4	13.9
38	Dimethyl oxalate	12.3	15.8	93	Sodium hydroxide, 50 %	3.2	25.8
39	Diphenyl	12.0	18.3	94	Stannic chloride	13.5	12.8
40	Dipropyl oxalate	10.3	17.7	95	Sulphur dioxide	15.2	7.1
41	Ethyl acetate	13.7	9.1	96	Sulphuric acid, 110 %	7.2	27.4
42	Ethyl alcohol, 100 %	10.5	13.8	97	Sulphuric acid, 98 %	7.0	24.8
43	Ethyl alcohol, 95 %	9.8	14.3	98	Sulphuric acid, 60 %	10.2	21.3
44	Ethyl alcohol, 40 %	6.5	16.6	99	Sulphuryl chloride	15.2	12.4
45	Ethyl benzene	13.2	11.5	100	Tetrachloroethane	11.9	15.7
46	Ethyl bromide	14.5	8.1	101	Tetrachloroethylene	14.2	12.7
47	Ethyl chloride	14.8	6.0	102	Titanium tetrachloride	14.4	12.3
48	Ethyl ether	14.5	5.3	103	Toluene	13.7	10.4
49	Ethyl formate	14.2	8.4	104	Trichloroethylene	14.8	10.5
50	Ethyl iodide	14.7	10.3	105	Turpentine	11.5	14.9
51	Ethylene glycol	6.0	23.6	106	Vinyl acetate	14.0	8.8
52	Formic acid	10.7	15.8	107	Water	10.2	13.0
53	Freon-11	14.4	9.0	108	Xylene, ortho	13.5	12.1
54	Freon-12	16.8	5.6	109	Xylene, meta	13.9	10.6
55	Freon-21	15.7	7.5	110	Xylene, para	13.9	10.9

By permission from CHEMICAL ENGINEERS' HANDBOOK, by J. H. Perry.
Copyrighted 1950, McGraw-Hill Book Company, Inc.

By permission from HEAT TRANSMISSION, by W. H. McAdams.
Copyrighted 1954, McGraw-Hill Book Company, Inc.

FIGURE P-5.4B

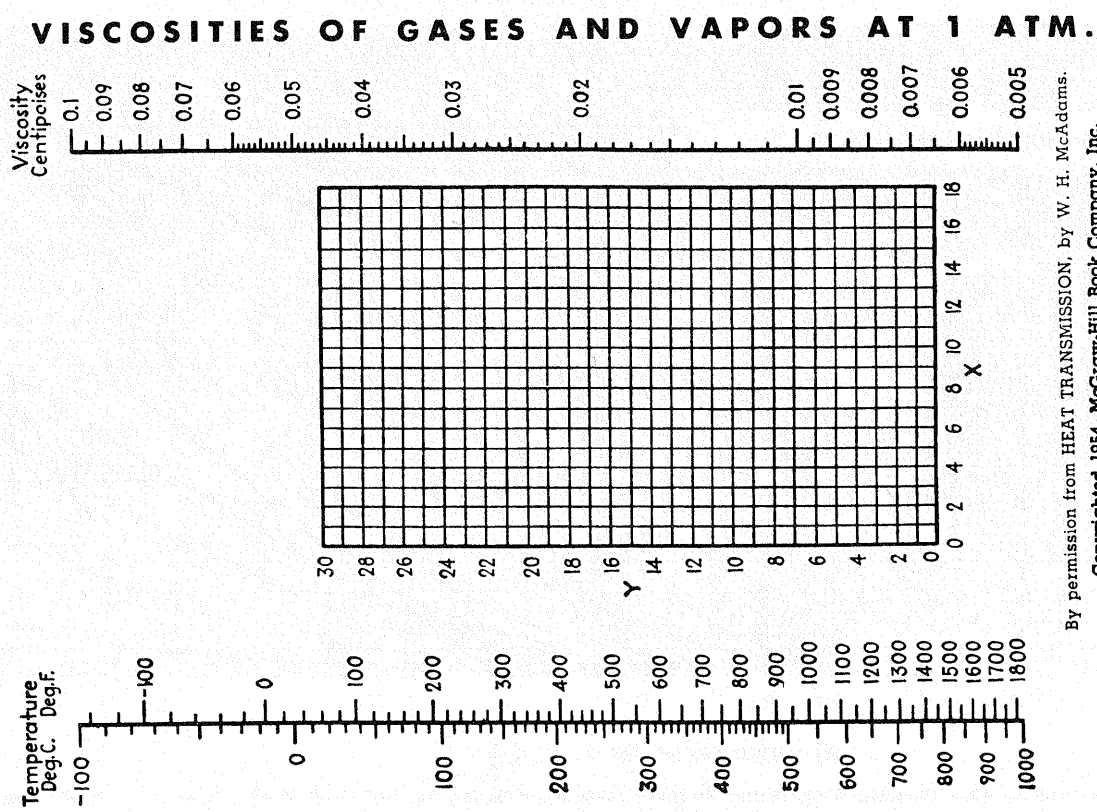

By permission from HEAT TRANSMISSION, by W. H. McAdams.
Copyrighted 1954. McGraw-Hill Book Company, Inc.

No.	Gas	X	Y	No.	Gas	X	Y
1	Acetic acid	7.7	14.3	29	Freon-113	11.3	14.0
2	Acetone	8.9	13.0	30	Helium	10.9	20.5
3	Acetylene	9.8	14.9	31	Hexane	8.6	11.8
4	Air	11.0	20.0	32	Hydrogen	11.2	12.4
5	Ammonia	8.4	16.0	33	$3H_2 + 1N_2$	11.2	17.2
6	Argon	10.5	22.4	34	Hydrogen bromide	8.8	20.9
7	Benzene	8.5	13.2	35	Hydrogen chloride	8.8	18.7
8	Bromine	8.9	19.2	36	Hydrogen cyanide	9.8	14.9
9	Butene	9.2	13.7	37	Hydrogen iodide	9.0	21.3
10	Butylene	8.9	13.0	38	Hydrogen sulphide	8.6	18.0
11	Carbon dioxide	9.5	18.7	39	Iodine	9.0	18.4
12	Carbon disulphide	8.0	16.0	40	Mercury	5.3	22.9
13	Carbon monoxide	11.0	20.0	41	Methane	9.9	15.5
14	Chlorine	9.0	18.4	42	Methyl alcohol	8.5	15.6
15	Chloroform	8.9	15.7	43	Nitric oxide	10.9	20.5
16	Cyanogen	9.2	15.2	44	Nitrogen	10.6	20.0
17	Cyclohexane	9.2	12.0	45	Nitrosyl chloride	8.0	17.6
18	Ethane	9.1	14.5	46	Nitrous oxide	8.8	19.0
19	Ethyl acetate	8.5	13.2	47	Oxygen	11.0	21.3
20	Ethyl alcohol	9.2	14.2	48	Pentane	7.0	12.8
21	Ethyl chloride	8.5	15.6	49	Propane	9.7	12.9
22	Ethyl ether	8.9	13.0	50	Propyl alcohol	8.4	13.4
23	Ethylene	9.3	15.1	51	Propylene	9.0	13.8
24	Fluorine	7.3	23.8	52	Sulphur dioxide	9.6	17.0
25	Freon-11	10.6	15.1	53	Toluene	8.6	12.4
26	Freon-12	11.1	16.0	54	2, 3, 3-trimethylbutane	9.5	10.5
27	Freon-21	10.8	15.3	55	Water	8.0	16.0
28	Freon-22	10.1	17.0	56	Xenon	9.3	23.0

By permission from CHEMICAL ENGINEERS' HANDBOOK, by J. H. Perry.
Copyrighted 1950. McGraw-Hill Book Company, Inc.

FIGURE P-5.5

HIGH PRESSURE GAS VISCOSITY

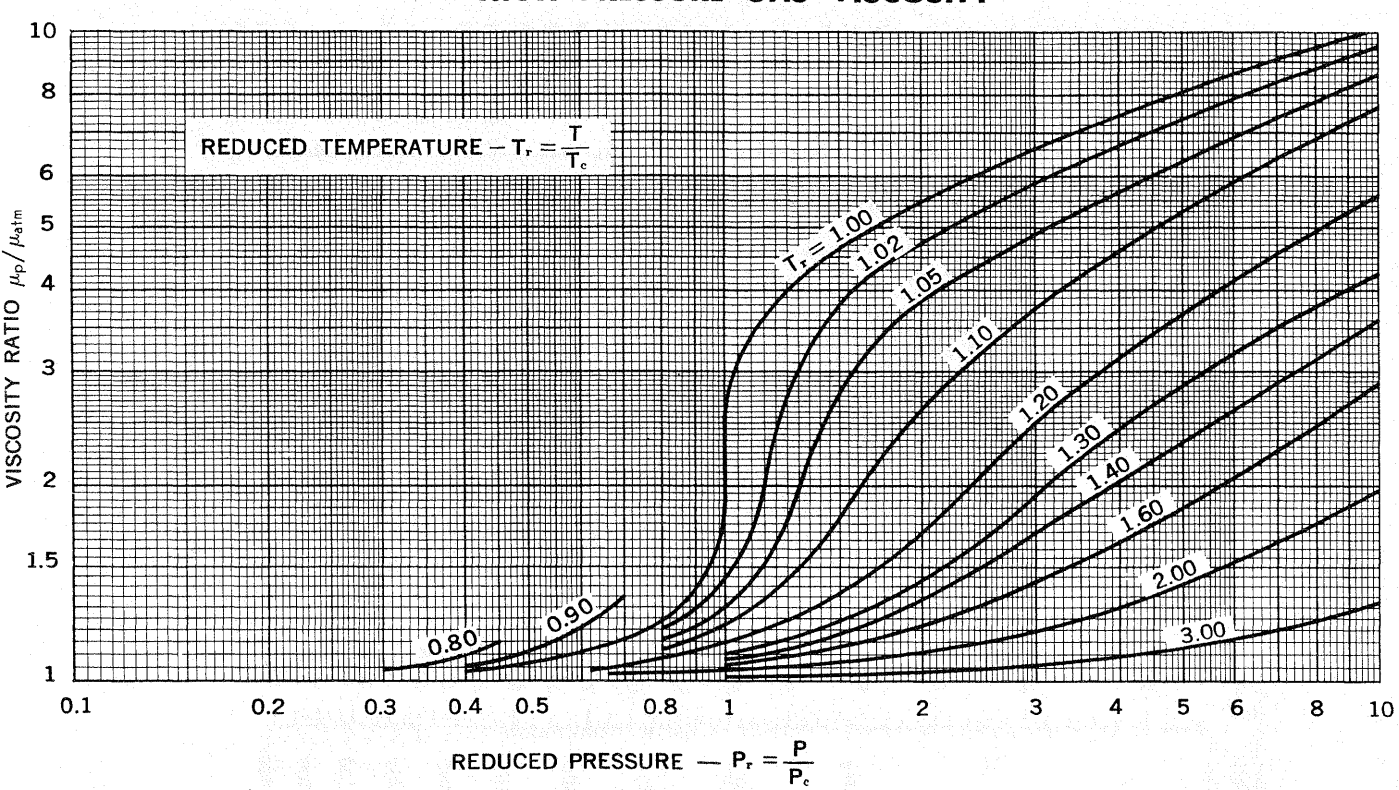

Reprinted by permission from Chemical Engineering Progress Symposium Series, 51, No. 16, 1955. N. L. Carr, J. D. Parent, and R. E. Peck.

TABLE P-6.1
CRITICAL PROPERTY DATA

Substance	Molecular Weight	Critical Temp.—°R	Critical Pressure PSIA	Substance	Molecular Weight	Critical Temp.—°R	Critical Pressure PSIA
Acetic Acid	60.05	1071	840	n-Heptane	100.2	972	397
Acetone	58.1	918	694	Heptyl Alcohol	116.2	1091	436
Acetylene	26.04	557	890	n-Hexane	86.2	914	440
Acrylic Acid	72.03	1176	734	Hexyl Alcohol	102.2	1055	490
Allyl Alcohol	58.08	982	831	Hydrogen	2.016	60	188
Ammonia	17.03	730	1639	Hydrogen Chloride	36.46	584	1199
Aniline	93.06	1259	769	Hydrogen Fluoride	20.01	830	941
Argon	40	272	706	Hydrogen Iodide	128	763	1191
Benzene	78.1	1013	714	Hydrogen Sulfide	34.08	672	1307
Bromobenzene	157.02	1207	655	Isobutane	58.1	735	529
1, 3 Butadiene	54.1	765	628	Isobutene	56.1	752	580
n-Butane	58.1	765	551	Isopentane	72.1	830	483
Butylene	56.1	755	583	Krypton	83.8	376	797
Butyl Acetate	116.16	1043	442	Methane	16.04	343	673
n-Butyl Alcohol	74.1	1014	640	Methyl Alcohol	32	926	1174
i-Butyl Alcohol	74.1	965	608	Methylethyl-Ketone	72.1	964	603
Carbon Dioxide	44.0	547	1070	Neon	20.18	80	395
Carbon Disulfide	76.14	983	1105	Nitrogen	28.02	227	492
Carbon Monoxide	28.01	239	510	Nitrogen Oxide	30.01	325	950
Carbon Tetrachloride	153.8	1001	660	n-Nonane	128.3	1071	332
Chlorine	70.9	751	1119	n-Octane	114.2	1025	362
Chlorobenzene	112.56	1138	655	Oxygen	32	278	737
Chloroform	119.4	960	805	n-Pentane	72.1	846	490
Cumene	120.19	1136	467	Phenol	94.1	1250	890
Cyclohexane	84.2	998	588	Propane	44.1	666	617
n-Decane	142.3	1112	304	Propylene	42.1	657	667
Dichlorodifluoromethane	120.9	694	597	n-Propyl Alcohol	60.1	966	750
Ethane	30.07	550	708	i-Propyl Alcohol	60.1	915	691
Ethylene	28.05	510	730	Sulfolane	120.2	1442	767
Ethyl Alcohol	46.1	930	925	Sulfur Dioxide	64.1	775	1142
Ethyl Acetate	88.1	942	557	Toluene	92.1	1069	590
Ethyl Benzene	106.16	1111	536	Trichloroethylene	131.4	774	809
Fluorine	38	260	808	Vinyl Acetate	86.1	946	609
Formaldehyde	30.02	739	984	Vinyl Chloride	62.5	1028	710
Helium	4.003	10	33.2	Water	18.02	1165	3206

CONTENTS

TABLE	TITLE	PAGE
D-1	Dimensions of Welded and Seamless Pipe	184
D-2	Dimensions of Welded Fittings	185
D-3	Dimensions of ASME Standard Flanges	186-187
D-5	Bolting Data - Recommended Minimum	188
D-5M	Metric Bolting Data - Recommended Minimum	189
D-6	Pressure - Temperature Ratings for Valves, Fittings and Flanges	190-229
D-7	Characteristics of Tubing	230
D-7M	Characteristics of Tubing (Metric)	231
D-8	Hardness Conversion Table	232
D-9	Internal Working Pressures of Tubes At Various Values of Allowable Stress	233-235
D-10	Modulus of Elasticity	236
D-10M	Modulus of Elasticity (Metric)	237
D-11	Mean Coefficients of Thermal Expansion	238
D-11M	Mean Coefficients of Thermal Expansion (Metric)	239
D-12	Thermal Conductivity of Metals	240
D-12M	Thermal Conductivity of Metals (Metric)	241
D-13	Weights of Circular Rings and Discs	242-247
D-14	Chord Lengths and Areas of Circular Segments	248
D-15	Conversion Factors	249-250
D-16	Conversion Tables for Wire and Sheet Metal Gages	251

TABLE D-1

DIMENSIONS OF WELDED AND SEAMLESS PIPE

NOMINAL PIPE SIZE	OUT-SIDE DIAM.	NOMINAL WALL THICKNESS FOR														
		SCHED. 5S*	SCHED. 10S*	SCHED. 10	SCHED. 20	SCHED. 30	STAND-ARD †	SCHED. 40	SCHED. 60	EXTRA STRONG §	SCHED. 80	SCHED. 100	SCHED. 120	SCHED. 140	SCHED. 160	XX STRONG
1/8	0.405		0.049				*0.068*	**0.068**		*0.095*	**0.095**					
1/4	0.540		0.065				*0.088*	**0.088**		*0.119*	**0.119**					
3/8	0.675		0.065				*0.091*	**0.091**		*0.126*	**0.126**					
1/2	0.840	0.065	0.083				*0.109*	**0.109**		*0.147*	**0.147**				**0.188**	**0.294**
3/4	1.050	0.065	0.083				*0.113*	**0.113**		*0.154*	**0.154**				**0.219**	**0.308**
1	1.315	0.065	0.109				*0.133*	**0.133**		*0.179*	**0.179**				**0.250**	**0.358**
1 1/4	1.660	0.065	0.109				*0.140*	**0.140**		*0.191*	**0.191**				**0.250**	**0.382**
1 1/2	1.900	0.065	0.109				*0.145*	**0.145**		*0.200*	**0.200**				**0.281**	**0.400**
2	2.375	0.065	0.109				*0.154*	**0.154**		*0.218*	**0.218**				**0.344**	**0.436**
2 1/2	2.875	0.083	0.120				*0.203*	**0.203**		*0.276*	**0.276**				**0.375**	**0.552**
3	3.5	0.083	0.120				*0.216*	**0.216**		*0.300*	**0.300**				**0.438**	**0.600**
3 1/2	4.0	0.083	0.120				*0.226*	**0.226**		*0.318*	**0.318**					
4	4.5	0.083	0.120				*0.237*	**0.237**		*0.337*	**0.337**		**0.438**		**0.531**	**0.674**
5	5.563	0.109	0.134				*0.258*	**0.258**		*0.375*	**0.375**		**0.500**		**0.625**	**0.750**
6	6.625	0.109	0.134				*0.280*	**0.280**		*0.432*	**0.432**		**0.562**		**0.719**	**0.864**
8	8.625	0.109	0.148		**0.250**	**0.277**	0.322	**0.322**	**0.406**	0.500	**0.500**	**0.594**	**0.719**	**0.812**	**0.906**	**0.875**
10	10.75	0.134	0.165		**0.250**	**0.307**	*0.365*	**0.365**	**0.500**	*0.500*	**0.594**	0.719	**0.844**	1.000	**1.125**	**1.000**
12	12.75	0.156	0.180		**0.250**	**0.330**	*0.375*	**0.406**	0.562	*0.500*	**0.688**	**0.844**	**1.000**	1.125	**1.312**	**1.000**
14 O.D.	14.0	0.156	0.188	0.250	0.312	0.375	**0.375**	0.438	0.594	*0.500*	**0.750**	**0.938**	1.094	1.250	1.406	
16 O.D.	16.0	0.165	0.188	0.250	0.312	0.375	**0.375**	0.500	**0.656**	**0.500**	**0.844**	**1.031**	**1.219**	1.438	1.594	
18 O.D.	18.0	0.165	0.188	0.250	0.312	0.438	**0.375**	0.562	**0.750**	**0.500**	0.938	**1.156**	1.375	1.562	1.781	
20 O.D.	20.0	0.188	0.218	0.250	0.375	0.500	**0.375**	0.594	**0.812**	**0.500**	**1.031**	1.281	1.500	1.750	1.969	
22 O.D.	22.0	0.188	0.218	0.250	0.375	0.500	**0.375**		**0.875**	**0.500**	1.125	1.375	1.625	1.875	2.125	
24 O.D.	24.0	0.218	0.250	0.250	0.375	0.562	**0.375**	0.688	**0.969**	**0.500**	1.218	1.531	1.812	2.062	2.344	
26 O.D.	26.0			0.312	0.500		**0.375**			**0.500**						
28 O.D.	28.0			0.312	0.500	0.625	**0.375**			**0.500**						
30 O.D.	30.0	0.250	0.312	0.312	0.500	0.625	**0.375**			**0.500**						
32 O.D.	32.0			0.312	0.500	0.625	**0.375**	0.688		**0.500**						
34 O.D.	34.0			0.312	0.500	0.625	**0.375**	0.688		**0.500**						
36 O.D.	36.0			0.312	0.500	0.625	**0.375**	0.750		**0.500**						
42 O.D.	42.0						**0.375**			**0.500**						

All dimensions are given in inches.

The decimal thicknesses listed for the respective pipe sizes represent their nominal or average wall dimensions. The actual thicknesses may be as much as 12.5% under the nominal thickness because of mill tolerance. Thicknesses shown in bold face are more readily available.

* Schedules 5S and 10S are available in corrosion resistant materials and Schedule 10S is also available in carbon steel.

† Thicknesses shown in italics are available also in stainless steel, under the designation Schedule 40S.

§ Thicknesses shown in italics are available also in stainless steel, under the designation Schedule 80S.

Reprinted by permission of Tube Turns Division of Chemetron Corporation

TABLE D-2

DIMENSIONS OF WELDING FITTINGS

(All Dimensions in Inches)

Nom. Pipe Size	A	B	C	D	E	F	L		G
							ANSI	Short	
½	1½	⅝	1⅞	.....	.....	1	3	.....	1⅜
¾	1⅛	7/16	1 11/16	.....	.....	1½	3	2	1 11/16
1	1½	⅞	2 3/16	1	1⅝	1½	4	2	2
1¼	1⅞	1	2¾	1¼	2 1/16	1½	4	2	2½
1½	2¼	1⅛	3¼	1½	2 7/16	1½	4	2	2⅞
2	3	1⅜	4 3/16	2	3 3/16	1½	6	2½	3⅝
2½	3¾	1¾	5 3/16	2½	3 15/16	1½	6	2½	4⅛
3	4½	2	6¼	3	4¾	2	6	2½	5
3½	5¼	2¼	7¼	3½	5½	2½	6	3	5½
4	6	2½	8¼	4	6¼	2½	6	3	6 3/16
5	7½	3⅛	10 5/16	5	7¾	3	8	3	7 5/16
6	9	3¾	12 5/16	6	9 5/16	3½	8	3½	8½
8	12	5	16 5/16	8	12 5/16	4	8	4	10 5/8
10	15	6¼	20⅜	10	15⅜	5	10	5	12¾
12	18	7½	24⅜	12	18⅜	6	10	6	15
14	21	8¾	28	14	21	6½	12	.....	16¼
16	24	10	32	16	24	7	12	.....	18½
18	27	11¼	36	18	27	8	12	.....	21
20	30	12½	40	20	30	9	12	.....	23
24	36	15	48	24	36	10½	12	.....	27¼
30	45	18½	60	30	45	10½	....	.....	.....

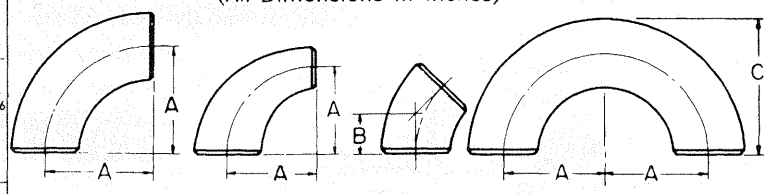

Long Radius Weld Ells

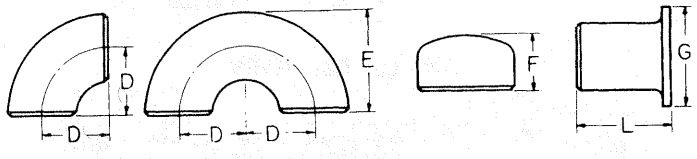

Caps

Stub Ends

Short Radius Weld Ells

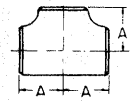

Straight Tees

Nom. Pipe Size	Outlet	A	D	L
1	1	1½	.....	.....
1	¾	1½	1½	2
1	½	1½	1½	2
1¼	1¼	1⅞	.....	.....
1¼	1	1⅞	1⅞	2
1¼	¾	1⅞	1⅞	2
1¼	½	1⅞	1⅞	2
1½	1½	2¼	.....	.....
1½	1¼	2¼	2¼	2½
1½	1	2¼	2¼	2½
1½	¾	2¼	2¼	2½
1½	½	2¼	2¼	2½
2	2	2½	.....	.....
2	1½	2½	2⅜	3
2	1¼	2½	2¼	3
2	1	2½	2	3
2	¾	2½	1¾	3
2½	2½	3	.....	.....
2½	2	3	2¾	3½
2½	1½	3	2⅝	3½
2½	1¼	3	2½	3½
2½	1	3	2¼	3½
3	3	3⅜	.....	.....
3	2½	3⅜	3¼	3½
3	2	3⅜	3	3½
3	1½	3⅜	2⅞	3½
3	1¼	3⅜	2¾	3½
3½	3½	3¾	.....	.....
3½	3	3¾	3⅝	4
3½	2½	3¾	3½	4
3½	2	3¾	3¼	4
3½	1½	3¾	3⅛	4

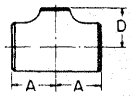

Reducing Tees

Nom. Pipe Size	Outlet	A	D	L
4	4	4⅛	.....	.....
4	3½	4⅛	4	4
4	3	4⅛	3⅞	4
4	2½	4⅛	3¾	4
4	2	4⅛	3½	4
4	1½	4⅛	3⅜	4
5	5	4⅞	.....	.....
5	4	4⅞	4⅝	5
5	3½	4⅞	4½	5
5	3	4⅞	4⅜	5
5	2½	4⅞	4¼	5
5	2	4⅞	4⅛	5
6	6	5⅝	.....	.....
6	5	5⅝	5⅜	5½
6	4	5⅝	5⅛	5½
6	3½	5⅝	5	5½
6	3	5⅝	4⅞	5½
6	2½	5⅝	4¾	5½
8	8	7	.....	.....
8	6	7	6⅝	6
8	5	7	6⅜	6
8	4	7	6⅛	6
8	3½	7	6	6
10	10	8½	.....	.....
10	8	8½	8	7
10	6	8½	7⅝	7
10	5	8½	7½	7
10	4	8½	7¼	7
12	12	10	.....	.....
12	10	10	9½	8
12	8	10	9	8
12	6	10	8⅝	8
12	5	10	8½	8



Con. & Ecc. Reducers

Nom. Pipe Size	Outlet	A	D	L
14	14	11	.....	.....
14	12	11	10⅝	13
14	10	11	10⅛	13
14	8	11	9¾	13
14	6	11	9⅜	13
16	16	12	.....	.....
16	14	12	12	14
16	12	12	11⅝	14
16	10	12	11⅛	14
16	8	12	10¾	14
16	6	12	10⅜	14
18	18	13½	.....	.....
18	16	13½	13	15
18	14	13½	13	15
18	12	13½	12⅝	15
18	10	13½	12⅛	15
18	8	13½	11¾	15
20	20	15	.....	.....
20	18	15	14½	20
20	16	15	14	20
20	14	15	14	20
20	12	15	13⅝	20
20	10	15	13⅛	20
20	8	15	12¾	20
24	24	17	.....	.....
24	20	17	17	20
24	18	17	16½	20
24	16	17	16	20
24	14	17	16	20
24	12	17	15⅝	20
24	10	17	15⅛	20

Reprinted by permission of Taylor Forge & Pipe Works

TABLE D-3

DIMENSIONS OF ASME STANDARD FLANGES

(All Dimensions in Inches)

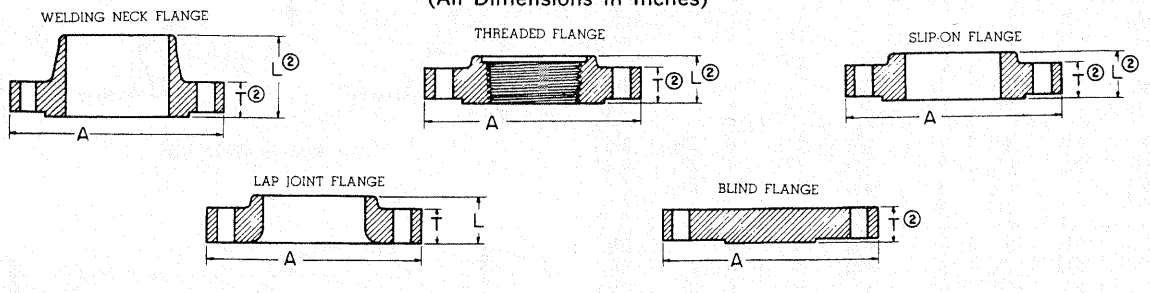

150 LB. FLANGES

Nom. Pipe Size	A	T②	L② Weld Neck	L② Thrd. Slip on	L② Lap Joint	Bolt Circle	No. and Sizes of Holes
1/2	3 1/2	7/16	1 7/8	5/8	5/8	2 3/8	4-5/8
3/4	3 7/8	1/2	2 1/16	5/8	5/8	2 3/4	4-5/8
1	4 1/4	9/16	2 3/16	11/16	11/16	3 1/8	4-5/8
1 1/4	4 5/8	5/8	2 1/4	13/16	13/16	3 1/2	4-5/8
1 1/2	5	11/16	2 7/16	7/8	7/8	3 7/8	4-5/8
2	6	3/4	2 1/2	1	1	4 3/4	4-3/4
2 1/2	7	7/8	2 3/4	1 1/8	1 1/8	5 1/2	4-3/4
3	7 1/2	15/16	2 3/4	1 3/16	1 3/16	6	4-3/4
3 1/2	8 1/2	15/16	2 13/16	1 1/4	1 1/4	7	8-3/4
4	9	15/16	3	1 5/16	1 5/16	7 1/2	8-3/4
5	10	15/16	3 1/2	1 7/16	1 7/16	8 1/2	8-7/8
6	11	1	3 1/2	1 9/16	1 9/16	9 1/2	8-7/8
8	13 1/2	1 1/8	4	1 3/4	1 3/4	11 3/4	8-7/8
10	16	1 3/16	4	1 15/16	1 15/16	14 1/4	12-1
12	19	1 1/4	4 1/2	2 3/16	2 3/16	17	12-1
14	21	1 3/8	5	2 1/4	3 1/8	18 3/4	12-1 1/8
16	23 1/2	1 7/16	5	2 1/2	3 7/16	21 1/4	16-1 1/8
18	25	1 9/16	5 1/2	2 11/16	3 13/16	22 3/4	16-1 1/4
20	27 1/2	1 11/16	5 11/16	2 7/8	4 1/16	25	20-1 1/4
24	32	1 7/8	6	3 1/4	4 3/8	29 1/2	20-1 3/8

300 LB. FLANGES

A	T②	L② Weld Neck	L② Thrd. Slip on	L② Lap Joint	Bolt Circle	No. and Size of Holes	Nom. Pipe Size
3 3/4	9/16	2 1/16	7/8	7/8	2 5/8	4-5/8	1/2
4 5/8	5/8	2 1/4	1	1	3 1/4	4-3/4	3/4
4 7/8	11/16	2 7/16	1 1/16	1 1/16	3 1/2	4-3/4	1
5 1/4	3/4	2 9/16	1 1/16	1 1/16	3 7/8	4-3/4	1 1/4
6 1/8	13/16	2 11/16	1 3/16	1 3/16	4 1/2	4-7/8	1 1/2
6 1/2	7/8	2 3/4	1 5/16	1 5/16	5	8-3/4	2
7 1/2	1	3	1 1/2	1 1/2	5 7/8	8-7/8	2 1/2
8 1/4	1 1/8	3 1/8	1 11/16	1 11/16	6 5/8	8-7/8	3
9	1 3/16	3 3/16	1 3/4	1 3/4	7 1/4	8-7/8	3 1/2
10	1 1/4	3 3/8	1 7/8	1 7/8	7 7/8	8-7/8	4
11	1 3/8	3 7/8	2	2	9 1/4	8-7/8	5
12 1/2	1 7/16	3 7/8	2 1/16	2 1/16	10 5/8	12-7/8	6
15	1 5/8	4 3/8	2 7/16	2 7/16	13	12-1	8
17 1/2	1 7/8	4 5/8	2 5/8	3 3/4	15 1/4	16-1 1/8	10
20 1/2	2	5 1/8	2 7/8	4	17 3/4	16-1 1/4	12
23	2 1/8	5 5/8	3	4 3/8	20 1/4	20-1 1/4	14
25 1/2	2 1/4	5 3/4	3 1/4	4 3/4	22 1/2	20-1 3/8	16
28	2 3/8	6 1/4	3 1/2	5 1/8	24 3/4	24-1 3/8	18
30 1/2	2 1/2	6 3/8	3 3/4	5 1/2	27	24-1 3/8	20
36	2 3/4	6 5/8	4 3/16	6	32	24-1 5/8	24

400 LB. FLANGES

Nom. Pipe Size	A	T②	L② Weld Neck	L② Thrd. Slip on	L② Lap Joint	Bolt Circle	No. and Size of Holes
1/2	3 3/4	9/16	2 1/16	7/8	7/8	2 5/8	4-5/8
3/4	4 5/8	5/8	2 1/4	1	1	3 1/4	4-3/4
1	4 7/8	11/16	2 7/16	1 1/16	1 1/16	3 1/2	4-3/4
1 1/4	5 1/4	13/16	2 5/8	1 1/8	1 1/8	3 7/8	4-3/4
1 1/2	6 1/8	7/8	2 3/4	1 1/4	1 1/4	4 1/2	4-7/8
2	6 1/2	1	2 7/8	1 7/16	1 7/16	5	8-3/4
2 1/2	7 1/2	1 1/8	3 1/8	1 5/8	1 5/8	5 7/8	8-7/8
3	8 1/4	1 1/4	3 1/4	1 13/16	1 13/16	6 5/8	8-7/8
3 1/2	9	1 3/8	3 3/8	1 15/16	1 15/16	7 1/4	8-1
4	10	1 3/8	3 1/2	2	2	7 7/8	8-1
5	11	1 1/2	4	2 1/8	2 1/8	9 1/4	8-1
6	12 1/2	1 5/8	4 1/16	2 1/4	2 1/4	10 5/8	12-1
8	15	1 7/8	4 5/8	2 11/16	2 11/16	13	12-1 1/8
10	17 1/2	2 1/8	4 7/8	2 7/8	4	15 1/4	16-1 1/4
12	20 1/2	2 1/4	5 3/8	3 1/8	4 1/4	17 3/4	16-1 3/8
14	23	2 3/8	5 7/8	3 5/16	4 5/8	20 1/4	20-1 3/8
16	25 1/2	2 1/2	6	3 11/16	5	22 1/2	20-1 1/2
18	28	2 5/8	6 1/2	3 7/8	5 3/8	24 3/4	24-1 1/2
20	30 1/2	2 3/4	6 5/8	4	5 3/4	27	24-1 5/8
24	36	3	6 7/8	4 1/2	6 1/4	32	24-1 7/8

600 LB. FLANGES

A	T②	L② Weld Neck	L② Thrd. Slip on	L② Lap Joint	Bolt Circle	No. and Size of Holes	Nom. Pipe Size
3 3/4	9/16	2 1/16	7/8	7/8	2 5/8	4-5/8	1/2
4 5/8	5/8	2 1/4	1	1	3 1/4	4-3/4	3/4
4 7/8	11/16	2 7/16	1 1/16	1 1/16	3 1/2	4-3/4	1
5 1/4	13/16	2 5/8	1 1/8	1 1/8	3 7/8	4-3/4	1 1/4
6 1/8	7/8	2 3/4	1 1/4	1 1/4	4 1/2	4-7/8	1 1/2
6 1/2	1	2 7/8	1 7/16	1 7/16	5	8-3/4	2
7 1/2	1 1/8	3 1/8	1 5/8	1 5/8	5 7/8	8-7/8	2 1/2
8 1/4	1 1/4	3 1/4	1 13/16	1 13/16	6 5/8	8-7/8	3
9	1 3/8	3 3/8	1 15/16	1 15/16	7 1/4	8-1	3 1/2
10 3/4	1 1/2	4	2 1/8	2 1/8	8 1/2	8-1	4
13	1 3/4	4 1/2	2 3/8	2 3/8	10 1/2	8-1 1/8	5
14	1 7/8	4 5/8	2 5/8	2 5/8	11 1/2	12 1 1/8	6
16 1/2	2 3/16	5 1/4	3	3	13 3/4	12-1 1/4	8
20	2 1/2	6	3 3/8	4 3/8	17	16-1 3/8	10
22	2 5/8	6 1/8	3 5/8	4 5/8	19 1/4	20-1 3/8	12
23 3/4	2 3/4	6 1/2	3 11/16	5	20 3/4	20-1 1/2	14
27	3	7	4 3/16	5 1/2	23 3/4	20-1 5/8	16
29 1/4	3 1/4	7 1/4	4 5/8	6	25 3/4	20-1 3/4	18
32	3 1/2	7 1/2	5	6 1/2	28 1/2	24-1 3/4	20
37	4	8	5 1/2	7 1/4	33	24-2	24

Reprinted by permission of Taylor Forge & Pipe Works

TABLE D-3—(Continued)

DIMENSIONS OF ASME STANDARD FLANGES

900 LB. FLANGES

Nom. Pipe Size	A	T②	L① Weld Neck	L① Thrd. Slip on	L① Lap Joint	Bolt Circle	No. and Size of Holes
1/2	4 3/4	7/8	2 3/8	1 1/4	1 1/4	3 1/4	4-7/8
3/4	5 1/8	1	2 3/4	1 3/8	1 3/8	3 1/2	4-7/8
1	5 7/8	1 1/8	2 7/8	1 5/8	1 5/8	4	4-1
1 1/4	6 1/4	1 1/8	2 7/8	1 5/8	1 5/8	4 3/8	4-1
1 1/2	7	1 1/4	3 1/4	1 3/4	1 3/4	4 7/8	4-1 1/8
2	8 1/2	1 1/2	4	2 1/4	2 1/4	6 1/2	8-1
2 1/2	9 5/8	1 5/8	4 1/8	2 1/2	2 1/2	7 1/2	8-1 1/8
3	9 1/2	1 1/2	4	2 1/8	2 1/8	7 1/2	8-1
3 1/2	.....	.....	.....	.....	.....	.....	.....
4	11 1/2	1 3/4	4 1/2	2 3/4	2 3/4	9 1/4	8-1 1/4
5	13 3/4	2	5	3 1/8	3 1/8	11	8-1 3/8
6	15	2 3/16	5 1/2	3 3/8	3 3/8	12 1/2	12-1 1/4
8	18 1/2	2 1/2	6 3/8	4	4 1/2	15 1/2	12-1 1/2
10	21 1/2	2 3/4	7 1/4	4 1/4	5	18 1/2	16-1 1/2
12	24	3 1/8	7 7/8	4 5/8	5 5/8	21	20-1 1/2
14	25 1/4	3 3/8	8 3/8	5 1/8	6 1/8	22	20-1 5/8
16	27 3/4	3 1/2	8 1/2	5 1/4	6 1/2	24 1/4	20-1 3/4
18	31	4	9	6	7 1/2	27	20-2
20	33 3/4	4 1/4	9 3/4	6 1/4	8 1/4	29 1/2	20-2 1/8
24	41	5 1/2	11 1/2	8	10 1/2	35 1/2	20-2 5/8

1500 LB. FLANGES

A	T②	L① Weld Neck	L① Thrd. Slip on	L① Lap Joint	Bolt Circle	No. and Size of Holes	Nom. Pipe Size
4 3/4	7/8	2 3/8	1 1/4	1 1/4	3 1/4	4-7/8	1/2
5 1/8	1	2 3/4	1 3/8	1 3/8	3 1/2	4-7/8	3/4
5 7/8	1 1/8	2 7/8	1 5/8	1 5/8	4	4-1	1
6 1/4	1 1/8	2 7/8	1 5/8	1 5/8	4 3/8	4-1	1 1/4
7	1 1/4	3 1/4	1 3/4	1 3/4	4 7/8	4-1 1/8	1 1/2
8 1/2	1 1/2	4	2 1/4	2 1/4	6 1/2	8-1	2
9 5/8	1 5/8	4 1/8	2 1/2	2 1/2	7 1/2	8-1 1/8	2 1/2
10 1/2	1 7/8	4 5/8	2 7/8	2 7/8	8	8-1 1/4	3
.....	.....	.....	.....	.....	.....	.....	3 1/2
12 1/4	2 1/8	4 7/8	3 5/16	3 5/16	9 1/2	8-1 3/8	4
14 3/4	2 7/8	6 1/8	4 1/8	4 1/8	11 1/2	8 1 5/8	5
15 1/2	3 1/4	6 3/4	4 11/16	4 11/16	12 1/2	12-1 1/2	6
19	3 5/8	8 3/8	5 5/8	5 5/8	15 1/2	12-1 3/4	8
23	4 1/4	10	6 1/4	7	19	12-2	10
26 1/2	4 7/8	11 1/8	7 1/8	8 5/8	22 1/2	16-2 1/8	12
29 1/2	5 1/4	11 3/4	.....	9 1/2	25	16-2 3/8	14
32 1/2	5 3/4	12 1/4	.....	10 1/4	27 3/4	16-2 5/8	16
36	6 3/8	12 7/8	.....	10 7/8	30 1/2	16-2 7/8	18
38 3/4	7	14	.....	11 1/2	32 3/4	16-3 1/8	20
46	8	16	.....	13	39	16-3 5/8	24

2500 LB. FLANGES

Nom. Pipe Size	A	T②	L① Weld Neck	L① Thrd.	L① Lap Joint	Bolt Circle	No. and Size of Holes
1/2	5 1/4	1 3/16	2 7/8	1 9/16	1 9/16	3 1/2	4- 7/8
3/4	5 1/2	1 1/4	3 1/8	1 11/16	1 11/16	3 3/4	4- 7/8
1	6 1/4	1 3/8	3 1/2	1 7/8	1 7/8	4 1/4	4-1
1 1/4	7 1/4	1 1/2	3 3/4	2 1/16	2 1/16	5 1/8	4-1 1/8
1 1/2	8	1 3/4	4 3/8	2 3/8	2 3/8	5 3/4	4-1 1/4
2	9 1/4	2	5	2 3/4	2 3/4	6 3/4	8-1 1/8
2 1/2	10 1/2	2 1/4	5 5/8	3 1/8	3 1/8	7 1/4	8-1 1/4
3	12	2 5/8	6 5/8	3 5/8	3 5/8	9	8-1 3/8
4	14	3	7 1/2	4 1/4	4 1/4	10 3/4	8-1 5/8
5	16 1/2	3 5/8	9	5 1/8	5 1/8	12 3/4	8-1 7/8
6	19	4 1/4	10 3/4	6	6	14 1/2	8-2 1/8
8	21 3/4	5	12 1/2	7	7	17 1/4	12-2 1/8
10	26 1/2	6 1/2	16 1/2	9	9	21 1/4	12-2 5/8
12	30	7 1/4	18 1/4	10	10	24 3/8	12-2 7/8

(1) Bore to match schedule of attached pipe.

(2) Includes 1/16" raised face in 150 pound and 300 pound standard. Does *not* include raised face in 400, 600, 900, 1500 and 2500 pound standard.

(3) Inside pipe diameters are also provided by this table.

Reprinted by permission of Taylor Forge & Pipe Works

WELDING NECK FLANGE BORES①③

Nom. Pipe Size	Outside Diameter	Sched. 10	Sched. 20	Sched. 30	Standard Wall	Sched. 40	Sched. 60	Extra Strong	Sched. 80	Sched. 100	Sched. 120	Sched. 140	Sched. 160	Double Extra Strong	Nom. Pipe Size
1/2	0.840	....	....	....	0.622	0.622	....	0.546	0.546	....	....	....	0.466	0.252	1/2
3/4	1.050	....	....	....	0.824	0.824	....	0.742	0.742	....	....	....	0.614	0.434	3/4
1	1.315	....	....	....	1.049	1.049	....	0.957	0.957	....	....	....	0.815	0.599	1
1 1/4	1.660	....	....	....	1.380	1.380	....	1.278	1.278	....	....	....	1.160	0.896	1 1/4
1 1/2	1.900	....	....	....	1.610	1.610	....	1.500	1.500	....	....	....	1.338	1.100	1 1/2
2	2.375	....	....	....	2.067	2.067	....	1.939	1.939	....	....	....	1.689	1.503	2
2 1/2	2.875	....	....	....	2.469	2.469	....	2.323	2.323	....	....	....	2.125	1.771	2 1/2
3	3.500	....	....	....	3.068	3.068	....	2.900	2.900	....	....	....	2.624	2.300	3
3 1/2	4.000	....	....	....	3.548	3.548	....	3.364	3.364	....	....	....	....	....	3 1/2
4	4.500	....	....	....	4.026	4.026	....	3.826	3.826	....	3.624	....	3.438	3.152	4
5	5.563	....	....	....	5.047	5.047	....	4.813	4.813	....	4.563	....	4.313	4.063	5
6	6.625	....	....	....	6.065	6.065	....	5.761	5.761	....	5.501	....	5.189	4.897	6
8	8.625	....	8.125	8.071	7.981	7.981	7.813	7.625	7.625	7.439	7.189	7.001	6.813	6.875	8
10	10.750	....	10.250	10.136	10.020	10.020	9.750	9.750	9.564	9.314	9.064	8.750	8.500	....	10
12	12.750	....	12.250	12.090	12.000	11.938	11.626	11.750	11.376	11.064	10.750	10.500	10.126	....	12
14	14.000	13.500	13.375	13.250	13.124	12.814	13.000	12.500	12.126	11.814	11.500	11.188	....	14
16	16.000	15.500	15.375	15.250	15.250	15.000	14.688	15.000	14.314	13.938	13.564	13.124	12.814	....	16
18	18.000	17.500	17.375	17.124	17.250	16.876	16.500	17.000	16.126	15.688	15.250	14.876	14.438	....	18
20	20.000	19.500	19.250	19.000	19.250	18.814	18.376	19.000	17.938	17.438	17.000	16.500	16.064	....	20
24	24.000	23.500	23.250	22.876	23.250	22.626	22.064	23.000	21.564	20.938	20.376	19.876	19.314	....	24
30	30.000	29.376	29.000	28.750	29.250	....	....	29.000	....	....	....	....	....	....	30

TABLE D-5

BOLTING DATA - RECOMMENDED MINIMUM

(All Dimensions in Inches Unless Noted)

Bolt Size d_B	Threads		Nut Dimensions		Bolt Spacing B	Radial Distance R_h	Radial Distance R_r	Edge Distance E	Wrench Diameter a	Bolt Size d_B
	No. of Threads	Root Area In.^{2}	Across Flats	Across Corners						
½	13	0.126	⅞	0.969	1¼	13/16	⅝	⅝	1½	½
⅝	11	0.202	1 1/16	1.175	1½	15/16	¾	¾	1¾	⅝
¾	10	0.302	1¼	1.383	1¾	1⅛	13/16	13/16	2 1/16	¾
⅞	9	0.419	1 7/16	1.589	2 1/16	1¼	15/16	15/16	2⅜	⅞
1	8	0.551	1⅝	1.796	2¼	1⅜	1 1/16	1 1/16	2⅝	1
1⅛	8	0.728	1 13/16	2.002	2½	1½	1⅛	1⅛	2⅞	1⅛
1¼	8	0.929	2	2.209	2 13/16	1¾	1¼	1¼	3¼	1¼
1⅜	8	1.155	2 3/16	2.416	3 1/16	1⅞	1⅜	1⅜	3½	1⅜
1½	8	1.405	2⅜	2.622	3¼	2	1½	1½	3¾	1½
1⅝	8	1.680	2 9/16	2.828	3½	2⅛		1⅝	4	1⅝
1¾	8	1.980	2¾	3.035	3¾	2¼		1¾	4¼	1¾
1⅞	8	2.304	2 15/16	3.242	4	2⅜		1⅞	4½	1⅞
2	8	2.652	3⅛	3.449	4¼	2½		2	4¾	2
2¼	8	3.423	3½	3.862	4¾	2¾		2¼	5¼	2¼
2½	8	4.292	3⅞	4.275	5¼	3 1/16		2⅜	5⅞	2½
2¾	8	5.259	4¼	4.688	5¾	3⅜		2⅝	6½	2¾
3	8	6.324	4⅝	5.102	6¼	3⅝		2⅞	7	3
3¼	8	7.487	5	5.515	6⅝	3¾		3	7¼	3¼
3½	8	8.749	5⅜	5.928	7⅛	4⅛		3¼	8	3½
3¾	8	10.108	5¾	6.341	7⅝	4 7/16		3½	8⅝	3¾
4	8	11.566	6⅛	6.755	8⅛	4⅝		3⅝	9	4

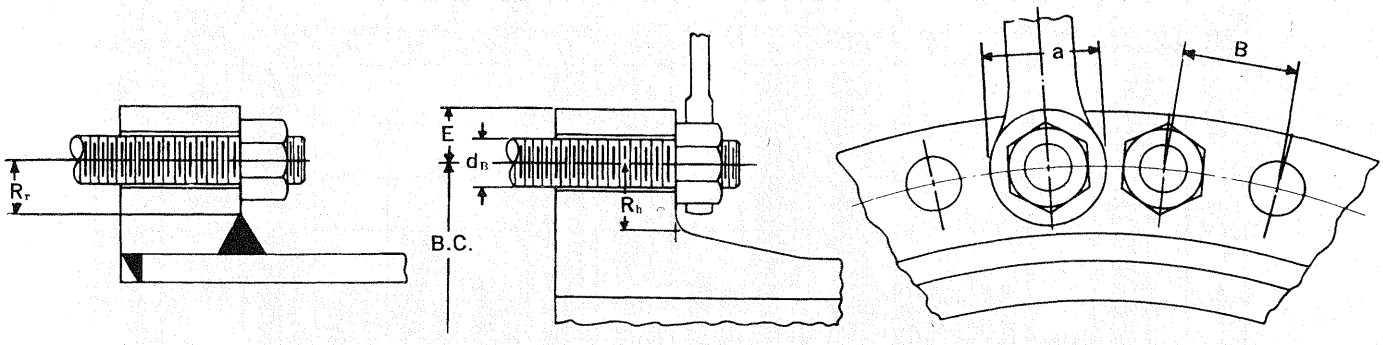

Nut dimensions are based on American National Standard B18.2.2

Threads are National Coarse series below 1 inch and eight-pitch thread series 1 inch and above.

TABLE D-5M

METRIC BOLTING DATA - RECOMMENDED MINIMUM

(All Dimensions in Millimeters Unless Noted)

Bolt Size d_B	Threads		Nut Dimensions		Bolt Spacing B	Radial Distance R_h	Radial Distance R_r	Edge Distance E	Bolt Size d_B
	Pitch	Root Area (mm^2)	Across Flats	Across Corners					
M12	1.75	72.398	21.00	24.25	31.75	20.64	15.88	15.88	M12
M16	2.00	138.324	27.00	31.18	44.45	28.58	20.64	20.64	M16
M20	2.50	217.051	34.00	39.26	52.39	31.75	23.81	23.81	M20
M22	2.50	272.419	36.00	41.57	53.98	33.34	25.40	25.40	M22
M24	3.00	312.748	41.00	47.34	58.74	36.51	28.58	28.58	M24
M27	3.00	413.852	46.00	53.12	63.50	38.10	29.00	29.00	M27
M30	3.50	502.965	50.00	57.74	73.03	46.04	33.34	33.34	M30
M36	4.00	738.015	60.00	69.28	84.14	53.97	39.69	39.69	M36
M42	4.50	1018.218	70.00	80.83	100.00	61.91		49.21	M42
M48	5.00	1342.959	80.00	92.38	112.71	68.26		55.56	M48
M56	5.50	1862.725	90.00	103.92	127.00	76.20		63.50	M56
M64	6.00	2467.150	100.00	115.47	139.70	84.14		66.68	M64
M72	6.00	3221.775	110.00	127.02	155.58	88.90		69.85	M72
M80	6.00	4076.831	120.00	138.56	166.69	93.66		74.61	M80
M90	6.00	5287.085	135.00	155.88	188.91	107.95		84.14	M90
M100	6.00	6651.528	150.00	173.21	207.96	119.06		93.66	M100

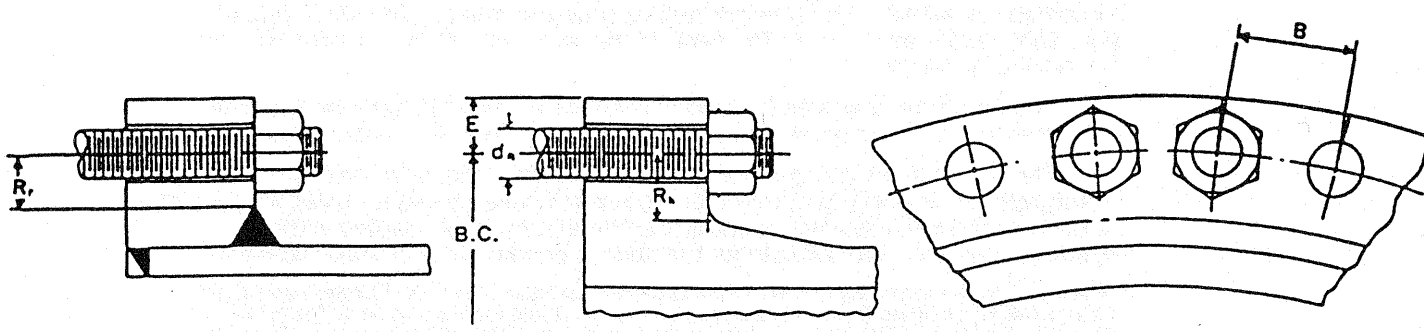

D-6
TABLES FOR
PRESSURE-TEMPERATURE RATINGS FOR VALVES, FITTINGS, AND FLANGES

INTRODUCTORY NOTES

1. Products used within the jurisdiction of the ASME Boiler and Pressure Vessel Code and the ASME Standard for pressure piping are subject to the maximum temperature and stress limitations upon the material and piping stated therein.

2. The ratings at -20 ° F to 100 ° F, given for the materials covered on pages 194 to 229 inclusive, shall also apply at lower temperatures. The ratings for low temperature service of the cast and forged materials listed in ASTM A352 and A350 shall be taken the same as the -20 ° F to 100 ° F ratings for carbon steel on pages 194 to 229 inclusive.

Some of the materials listed in the rating tables undergo a decrease in impact resistance at temperatures lower than -20 ° F to such an extent as to be unable to safely resist shock loadings, sudden changes of stress or high stress concentrations. Therefore, products that are to operate at temperatures below -20 ° F shall conform to the rules of the applicable Codes under which they are to be used.

3. The pressure-temperature ratings in the tables apply to all products covered by this ASME Standard. Valves conforming to the requirements of this ASME Standard must, in other respects, merit these ratings.

All ratings are the maximum allowable nonshock pressures (psig) at the tabulated temperature (degrees F) and may be interpolated between the temperatures shown. The primary service pressure ratings (150, 300, 400, 600, 900, 1500, 2500) are those at the head of the tables and shown in bold face type in the body of the tables.

Temperatures (degrees F) shown in the tables, used in determining these rating tables, were temperatures on the inside of the pressure retaining structure.

The use of these ratings require gaskets conforming to the requirements of Paragraph 5.4 of ASME B16.5-(1996). The user is responsible for selecting gaskets of dimensions and materials to withstand the required bolt loading without injurious crushing, and suitable for the service conditions in all other respects.

Reference: American Society of Mechanical Engineers Standard Steel Pipe Flanges and Flanged Fittings (ASME Standard B16.5-(1996 and 1998)) reprinted with the permission of The American Society of Mechanical Engineers, United Engineering Center, 345 E. 47th Street, New York, NY 10017. All rights reserved.

TABLE 1A LIST OF MATERIAL SPECIFICATIONS

Material Group	Nominal Designation	Pressure-Temperature Rating Table	Applicable ASTM Specifications[1]		
			Forgings	Castings	Plates
1.1	C-Si C-Mn-Si C-Mn-Si-V	2-1.1	A 105 A 350 Gr. LF2 A 350 Gr. LF6 Cl. 1	A 216 Gr. WCB	A 515 Gr. 70 A 516 Gr. 70 A 537 Cl. 1
1.2	C-Mn-Si C-Mn-Si-V 2½Ni 3½Ni	2-1.2	 A 350 Gr. LF6 Cl. 2 A 350 Gr. LF3	A 216 Gr. WCC A 352 Gr. LCC A 352 Gr. LC2 A 352 Gr. LC3	 A 203 Gr. B A 203 Gr. E
1.3	C-Si C-Mn-Si 2½Ni 3½Ni	2-1.3		A 352 Gr. LCB	A 515 Gr. 65 A 516 Gr. 65 A 203 Gr. A A 203 Gr. D
1.4	C-Si C-Mn-Si	2-1.4	 A 350 Gr. LF1 Cl. 1		A 515 Gr. 60 A 516 Gr. 60
1.5	C-½Mo	2-1.5	A 182 Gr. F1	A 217 Gr. WC1 A 352 Gr. LC1	A 204 Gr. A A 204 Gr. B
1.7	C-½Mo ½Cr-½Mo Ni-½Cr-½Mo ¾Ni-¾Cr-1Mo	2-1.7	 A 182 Gr. F2	 A 217 Gr. WC4 A 217 Gr. WC5	A 204 Gr. C
1.9	1Cr-½Mo 1¼Cr-½Mo 1¼Cr-½Mo-Si	2-1.9	A 182 Gr. F12 Cl. 2 A 182 Gr. F11 Cl. 2	 A 217 Gr. WC6	 A 387 Gr. 11 Cl. 2
1.10	2¼Cr-1Mo	2-1.10	A 182 Gr. F22 Cl. 3	A 217 Gr. WC9	A 387 Gr. 22 Cl. 2
1.13	5Cr-½Mo	2-1.13	A 182 Gr. F5 A 182 Gr. F5a	 A 217 Gr. C5	
1.14	9Cr-1Mo	2-1.14	A 182 Gr. F9	A 217 Gr. C12	
1.15	9Cr-1Mo-V	2-1.15	A 182 Gr. F91	A 217 Gr. C12A	A 387 Gr. 91 Cl. 2
2.1	18Cr-8Ni	2-2.1	A 182 Gr. F304 A 182 Gr. F304H	A 351 Gr. CF3 A 351 Gr. CF8	A 240 Gr. 304 A 240 Gr. 304H
2.2	16Cr-12Ni-2Mo 18Cr-13Ni-3Mo 19Cr-10Ni-3Mo	2-2.2	A 182 Gr. F316 A 182 Gr. F316H	A 351 Gr. CF3M A 351 Gr. CF8M A 351 Gr. CG8M	A 240 Gr. 316 A 240 Gr. 316H A 240 Gr. 317
2.3	18Cr-8Ni 16Cr-12Ni-2Mo	2-2.3	A 182 Gr. F304L A 182 Gr. F316L		A 240 Gr. 304L A 240 Gr. 316L
2.4	18Cr-10Ni-Ti	2-2.4	A 182 Gr. F321 A 182 Gr. F321H		A 240 Gr. 321 A 240 Gr. 321H

Reprinted from ASME B16.5-1996 and 1998, by permission of The American Society of Mechanical Engineers. All rights reserved

TABLE 1A LIST OF MATERIAL SPECIFICATIONS (CONT'D)

Material Group	Nominal Designation	Pressure-Temperature Rating Table	Applicable ASTM Specifications[1]		
			Forgings	Castings	Plates
2.5	18Cr-10Ni-Cb	2-2.5	A 182 Gr. F347 A 182 Gr. F347H A 182 Gr. F348 A 182 Gr. F348H	A 351 Gr. CF8C	A 240 Gr. 347 A 240 Gr. 347H A 240 Gr. 348 A 240 Gr. 348H
2.6	25Cr-12Ni 23Cr-12Ni	2-2.6		A 351 Gr. CH8 A 351 Gr. CH20	 A 240 Gr. 309S A 240 Gr. 309H
2.7	25Cr-20Ni	2-2.7	A 182 Gr. F310	A 351 Gr. CK20	A 240 Gr. 310S A 240 Gr. 310H
2.8	20Cr-18Ni-6Mo 22Cr-5Ni-3Mo-N 25Cr-7Ni-4Mo-N 24Cr-10Ni-4Mo-V 25Cr-5Ni-2Mo-3Cu 25Cr-7Ni-3.5Mo-W-Cb 25Cr-7Ni-3.5Mo-N-Cu-W	2-2.8	A 182 Gr. F44 A 182 Gr. F51 A 182 Gr. F53 A 182 Gr. F55	A 351 Gr. CK3MCuN A 351 Gr. CE8MN A 351 Gr. CD4MCu A 351 Gr. CD3MWCuN	A 240 Gr. S31254 A 240 Gr. S31803 A 240 Gr. S32750 A 240 Gr. S32760
3.1	35Ni-35Fe-20Cr-Cb	2-3.1	B 462 Gr. N08020		B 463 Gr. N08020
3.2	99.0Ni	2-3.2	B 160 Gr. N02200		B 162 Gr. N02200
3.3	99.0Ni-Low C	2-3.3	B 160 Gr. N02201		B 162 Gr. N02201
3.4	67Ni-30Cu 67Ni-30Cu-S	2-3.4	B 564 Gr. N04400 B 164 Gr. N04405		B 127 Gr. N04400
3.5	72Ni-15Cr-8Fe	2-3.5	B 564 Gr. N06600		B 168 Gr. N06600
3.6	33Ni-42Fe-21Cr	2-3.6	B 564 Gr. N08800		B 409 Gr. N08800
3.7	65Ni-28Mo-2Fe	2-3.7	B 335 Gr. N10665		B 333 Gr. N10665
3.8	54Ni-16Mo-15Cr 60Ni-22Cr-9Mo-3.5Cb 62Ni-28Mo-5Fe 70Ni-16Mo-7Cr-5Fe 61Ni-16Mo-16Cr 42Ni-21.5Cr-3Mo-2.3Cu	2-3.8	B 564 Gr. N10276 B 564 Gr. N06625 B 335 Gr. N10001 B 573 Gr. N10003 B 574 Gr. N06455 B 564 Gr. N08825		B 575 Gr. N10276 B 443 Gr. N06625 B 333 Gr. N10001 B 434 Gr. N10003 B 575 Gr. N06455 B 424 Gr. N08825
3.9	47Ni-22Cr-9Mo-18Fe	2-3.9	B 572 Gr. N06002		B 435 Gr. N06002
3.10	25Ni-46Fe-21Cr-5Mo	2-3.10	B 672 Gr. N08700		B 599 Gr. N08700
3.11	44Fe-25Ni-21Cr-Mo	2-3.11	B 649 Gr. N08904		B 625 Gr. N08904
3.12	26Ni-43Fe-22Cr-5Mo 47Ni-22Cr-20Fe-7Mo	2-3.12	B 621 Gr. N08320 B 581 Gr. N06985		B 620 Gr. N08320 B 582 Gr. N06985

(Table 1A continues on next page; Notes follow at end of Table)

Reprinted from ASME B16.5-1996 and 1998, by permission of The American Society of Mechanical Engineers. All rights reserved

TABLE 1A LIST OF MATERIAL SPECIFICATIONS (CONT'D)

Material Group	Nominal Designation	Pressure-Temperature Rating Table	Applicable ASTM Specifications[1]		
			Forgings	Castings	Plates
3.13	49Ni-25Cr-18Fe-6Mo Ni-Fe-Cr-Mo-Low Cu	2-3.13	B 581 Gr. N06975 B 564 Gr. N08031		B 582 Gr. N06975 B 625 Gr. N08031
3.14	47Ni-22Cr-19Fe-6Mo	2-3.14	B 581 Gr. N06007		B 582 Gr. N06007
3.15	33Ni-42Fe-21Cr	2-3.15	B 564 Gr. N08810		B 409 Gr. N08810
3.16	35Ni-19Cr-1¼Si	2-3.16	B 511 Gr. N08330		B 536 Gr. N08330
3.17	29Ni-20.5Cr-3.5Cu-2.5Mo	2-3.17		A 351 Gr. CN7M	

GENERAL NOTES:

(a) For temperature limitations, see Notes in Table 2.

(b) Plate materials are listed only for use as blind flanges (see para. 5.1). Additional plate materials listed in ASME B16.34 may also be used with corresponding B16.34 Standard Class ratings.

(c) Material Groups not listed in Table 1A are intended for use in valves. See ASME B16.34.

NOTE:

(1) ASME Boiler and Pressure Vessel Code, Section II materials, which also meet the requirements of the listed ASTM specifications, may also be used.

Reprinted from ASME B16.5-1996 and 1998, by permission of The American Society of Mechanical Engineers. All rights reserved

TABLES 2
PRESSURE–TEMPERATURE RATINGS FOR GROUPS 1.1 THROUGH 3.17 MATERIALS

TABLE 2-1.1 RATINGS FOR GROUP 1.1 MATERIALS

Nominal Designation	Forgings	Castings	Plates
C–Si	A 105 (1)	A 216 Gr. WCB (1)	A 515 Gr. 70 (1)
C–Mn–Si	A 350 Gr. LF2 (1)		A 516 Gr. 70 (1)(2) A 537 Cl. 1 (3)
C–Mn–Si–V	A 350 Gr. LF6 Cl. 1 (4)		

NOTES:
(1) Upon prolonged exposure to temperatures above 800°F, the carbide phase of steel may be converted to graphite. Permissible, but not recommended for prolonged use above 800°F.
(2) Not to be used over 850°F.
(3) Not to be used over 700°F.
(4) Not to be used over 500°F.

WORKING PRESSURES BY CLASSES, psig

Class Temp., °F	150	300	400	600	900	1500	2500
-20 to 100	285	740	990	1480	2220	3705	6170
200	260	675	900	1350	2025	3375	5625
300	230	655	875	1315	1970	3280	5470
400	200	635	845	1270	1900	3170	5280
500	170	600	800	1200	1795	2995	4990
600	140	550	730	1095	1640	2735	4560
650	125	535	715	1075	1610	2685	4475
700	110	535	710	1065	1600	2665	4440
750	95	505	670	1010	1510	2520	4200
800	80	410	550	825	1235	2060	3430
850	65	270	355	535	805	1340	2230
900	50	170	230	345	515	860	1430
950	35	105	140	205	310	515	860
1000	20	50	70	105	155	260	430

Reprinted from ASME B16.5-1996 and 1998, by permission of The American Society of Mechanical Engineers. All rights reserved

TABLE 2-1.2 RATINGS FOR GROUP 1.2 MATERIALS

Nominal Designation	Forgings	Castings	Plates
C-Mn-Si		A 216 Gr. WCC (1) A 352 Gr. LCC (2)	
C-Mn-Si-V	A 350 Gr. LF6 Cl. 2 (3)		
2½Ni		A 352 Gr. LC2	A 203 Gr. B (1)
3½Ni	A 350 Gr. LF3	A 352 Gr. LC3	A 203 Gr. E (1)

NOTES:
(1) Upon prolonged exposure to temperatures above 800°F, the carbide phase of steel may be converted to graphite. Permissible, but not recommended for prolonged use above 800°F.
(2) Not to be used over 650°F.
(3) Not to be used over 500°F.

WORKING PRESSURES BY CLASSES, psig

Class Temp., °F	150	300	400	600	900	1500	2500
-20 to 100	290	750	1000	1500	2250	3750	6250
200	260	750	1000	1500	2250	3750	6250
300	230	730	970	1455	2185	3640	6070
400	200	705	940	1410	2115	3530	5880
500	170	665	885	1330	1995	3325	5540
600	140	605	805	1210	1815	3025	5040
650	125	590	785	1175	1765	2940	4905
700	110	570	755	1135	1705	2840	4730
750	95	505	670	1010	1510	2520	4200
800	80	410	550	825	1235	2060	3430
850	65	270	355	535	805	1340	2230
900	50	170	230	345	515	860	1430
950	35	105	140	205	310	515	860
1000	20	50	70	105	155	260	430

Reprinted from ASME B16.5-1996 and 1998, by permission of The American Society of Mechanical Engineers. All rights reserved

TABLE 2-1.3 RATINGS FOR GROUP 1.3 MATERIALS

Nominal Designation	Forgings	Castings	Plates
C–Si		A 352 Gr. LCB (3)	A 515 Gr. 65 (1)
C–Mn–Si			A 516 Gr. 65 (1)(2)
2½Ni			A 203 Gr. A (1)
3½Ni			A 203 Gr. D (1)

NOTES:
(1) Upon prolonged exposure to temperatures above 800°F, the carbide phase of steel may be converted to graphite. Permissible, but not recommended for prolonged use above 800°F.
(2) Not to be used over 850°F.
(3) Not to be used over 650°F.

WORKING PRESSURES BY CLASSES, psig

Class Temp., °F	150	300	400	600	900	1500	2500
–20 to 100	265	695	925	1390	2085	3470	5785
200	250	655	875	1315	1970	3280	5470
300	230	640	850	1275	1915	3190	5315
400	200	620	825	1235	1850	3085	5145
500	170	585	775	1165	1745	2910	4850
600	140	535	710	1065	1600	2665	4440
650	125	525	695	1045	1570	2615	4355
700	110	520	690	1035	1555	2590	4320
750	95	475	630	945	1420	2365	3945
800	80	390	520	780	1175	1955	3260
850	65	270	355	535	805	1340	2230
900	50	170	230	345	515	860	1430
950	35	105	140	205	310	515	860
1000	20	50	70	105	155	260	430

Reprinted from ASME B16.5-1996 and 1998, by permission of The American Society of Mechanical Engineers. All rights reserved

TABLE 2-1.4 RATINGS FOR GROUP 1.4 MATERIALS

Nominal Designation	Forgings	Castings	Plates
C–Si			A 515 Gr. 60 (1)
C–Mn–Si	A 350 Gr. LF1, Cl. 1 (1)		A 516 Gr. 60 (1)(2)

NOTES:
(1) Upon prolonged exposure to temperatures above 800°F, the carbide phase of steel may be converted to graphite. Permissible, but not recommended for prolonged use above 800°F.
(2) Not to be used over 850°F.

WORKING PRESSURES BY CLASSES, psig

Class Temp., °F	150	300	400	600	900	1500	2500
–20 to 100	235	620	825	1235	1850	3085	5145
200	215	560	750	1125	1685	2810	4680
300	210	550	730	1095	1640	2735	4560
400	200	530	705	1060	1585	2645	4405
500	170	500	665	995	1495	2490	4150
600	140	455	610	915	1370	2285	3805
650	125	450	600	895	1345	2245	3740
700	110	450	600	895	1345	2245	3740
750	95	445	590	885	1325	2210	3685
800	80	370	495	740	1110	1850	3085
850	65	270	355	535	805	1340	2230
900	50	170	230	345	515	860	1430
950	35	105	140	205	310	515	860
1000	20	50	70	105	155	260	430

Reprinted from ASME B16.5-1996 and 1998, by permission of The American Society of Mechanical Engineers. All rights reserved

TABLE 2-1.5 RATINGS FOR GROUP 1.5 MATERIALS

Nominal Designation	Forgings	Castings	Plates
C-½Mo	A 182 Gr. F1 (1)	A 217 Gr. WC1 (1)(2) A 352 Gr. LC1 (3)	A 204 Gr. A (1) A 204 Gr. B (1)

NOTES:
(1) Upon prolonged exposure to temperatures above 875°F, the carbide phase of carbon-molybdenum steel may be converted to graphite. Permissible, but not recommended for prolonged use above 875°F.
(2) Use normalized and tempered material only.
(3) Not to be used over 650°F.

WORKING PRESSURES BY CLASSES, psig

Class Temp., °F	150	300	400	600	900	1500	2500
-20 to 100	265	695	925	1390	2085	3470	5785
200	260	680	905	1360	2035	3395	5660
300	230	655	870	1305	1955	3260	5435
400	200	640	855	1280	1920	3200	5330
500	170	620	830	1245	1865	3105	5180
600	140	605	805	1210	1815	3025	5040
650	125	590	785	1175	1765	2940	4905
700	110	570	755	1135	1705	2840	4730
750	95	530	710	1065	1595	2660	4430
800	80	510	675	1015	1525	2540	4230
850	65	485	650	975	1460	2435	4060
900	50	450	600	900	1350	2245	3745
950	35	280	375	560	845	1405	2345
1000	20	165	220	330	495	825	1370

Reprinted from ASME B16.5-1996 and 1998, by permission of The American Society of Mechanical Engineers. All rights reserved

TABLE 2-1.7 RATINGS FOR GROUP 1.7 MATERIALS

Nominal Designation	Forgings	Castings	Plates
C-½Mo			A 204 Gr. C (1)
½Cr-½Mo	A 182 Gr. F2 (3)		
Ni-½Cr-½Mo		A 217 Gr. WC4 (2)(3)	
¾Ni-¾Cr-1Mo		A 217 Gr. WC5 (2)	

NOTES:
(1) Upon prolonged exposure to temperatures above 875°F, the carbide phase of carbon-molybdenum steel may be converted to graphite. Permissible, but not recommended for prolonged use above 875°F.
(2) Use normalized and tempered material only.
(3) Not to be used over 1000°F.

WORKING PRESSURES BY CLASSES, psig

Class Temp., °F	150	300	400	600	900	1500	2500
-20 to 100	290	750	1000	1500	2250	3750	6250
200	260	750	1000	1500	2250	3750	6250
300	230	720	965	1445	2165	3610	6015
400	200	695	925	1385	2080	3465	5775
500	170	665	885	1330	1995	3325	5540
600	140	605	805	1210	1815	3025	5040
650	125	590	785	1175	1765	2940	4905
700	110	570	755	1135	1705	2840	4730
750	95	530	710	1065	1595	2660	4430
800	80	510	675	1015	1525	2540	4230
850	65	485	650	975	1460	2435	4060
900	50	450	600	900	1350	2245	3745
950	35	315	420	630	945	1575	2630
1000	20	200	270	405	605	1010	1685
1050	. . .	160	210	315	475	790	1315

Reprinted from ASME B16.5-1996 and 1998, by permission of The American Society of Mechanical Engineers. All rights reserved

TABLE 2-1.9 RATINGS FOR GROUP 1.9 MATERIALS

Nominal Designation	Forgings	Castings	Plates
1Cr–½Mo	A 182 Gr. F12 Cl. 2 (1)(2)		
1¼Cr–½Mo		A 217 Gr. WC6 (1)(3)	
1¼Cr–½Mo	A 182 Gr. F11 Cl. 2 (1)(2)		A 387 Gr. 11 Cl. 2 (2)

NOTES:
(1) Use normalized and tempered material only.
(2) Permissible, but not recommended for prolonged use above 1100°F.
(3) Not to be used over 1100°F.

WORKING PRESSURES BY CLASSES, psig

Class Temp., °F	150	300	400	600	900	1500	2500
–20 to 100	290	750	1000	1500	2250	3750	6250
200	260	750	1000	1500	2250	3750	6250
300	230	720	965	1445	2165	3610	6015
400	200	695	925	1385	2080	3465	5775
500	170	665	885	1330	1995	3325	5540
600	140	605	805	1210	1815	3025	5040
650	125	590	785	1175	1765	2940	4905
700	110	570	755	1135	1705	2840	4730
750	95	530	710	1065	1595	2660	4430
800	80	510	675	1015	1525	2540	4230
850	65	485	650	975	1460	2435	4060
900	50	450	600	900	1350	2245	3745
950	35	320	425	640	955	1595	2655
1000	20	215	290	430	650	1080	1800
1050	. . .	145	190	290	430	720	1200
1100	. . .	95	130	190	290	480	800
1150	. . .	60	80	125	185	310	515
1200	. . .	40	50	75	115	190	315

Reprinted from ASME B16.5-1996 and 1998, by permission of The American Society of Mechanical Engineers. All rights reserved

TABLE 2-1.10 RATINGS FOR GROUP 1.10 MATERIALS

Nominal Designation	Forgings	Castings	Plates
2¼Cr–1Mo	A 182 Gr. F22 Cl. 3 (2)	A 217 Gr. WC9 (1)(3)	A 387 Gr. 22 Cl. 2 (2)

NOTES:
(1) Use normalized and tempered material only.
(2) Permissible, but not recommended for prolonged use above 1100°F.
(3) Not to be used over 1100°F.

WORKING PRESSURES BY CLASSES, psig

Class Temp., °F	150	300	400	600	900	1500	2500
–20 to 100	290	750	1000	1500	2250	3750	6250
200	260	750	1000	1500	2250	3750	6250
300	230	730	970	1455	2185	3640	6070
400	200	705	940	1410	2115	3530	5880
500	170	665	885	1330	1995	3325	5540
600	140	605	805	1210	1815	3025	5040
650	125	590	785	1175	1765	2940	4905
700	110	570	755	1135	1705	2840	4730
750	95	530	710	1065	1595	2660	4430
800	80	510	675	1015	1525	2540	4230
850	65	485	650	975	1460	2435	4060
900	50	450	600	900	1350	2245	3745
950	35	375	505	755	1130	1885	3145
1000	20	260	345	520	780	1305	2170
1050	. . .	175	235	350	525	875	1455
1100	. . .	110	145	220	330	550	915
1150	. . .	70	90	135	205	345	570
1200	. . .	40	55	80	125	205	345

Reprinted from ASME B16.5-1996 and 1998, by permission of The American Society of Mechanical Engineers. All rights reserved

TABLE 2-1.13 RATINGS FOR GROUP 1.13 MATERIALS

Nominal Designation	Forgings	Castings	Plates
5Cr-½Mo	A 182 Gr. F5 A 182 Gr. F5a	A 217 Gr. C5 (1)	

NOTE:
(1) Use normalized and tempered material only.

WORKING PRESSURES BY CLASSES, psig							
Class Temp., °F	150	300	400	600	900	1500	2500
−20 to 100	290	750	1000	1500	2250	3750	6250
200	260	745	995	1490	2235	3725	6205
300	230	715	955	1430	2150	3580	5965
400	200	705	940	1410	2115	3530	5880
500	170	665	885	1330	1995	3325	5540
600	140	605	805	1210	1815	3025	5040
650	125	590	785	1175	1765	2940	4905
700	110	570	755	1135	1705	2840	4730
750	95	530	705	1055	1585	2640	4400
800	80	510	675	1015	1525	2540	4230
850	65	485	645	965	1450	2415	4030
900	50	370	495	740	1110	1850	3085
950	35	275	365	550	825	1370	2285
1000	20	200	265	400	595	995	1655
1050	. . .	145	190	290	430	720	1200
1100	. . .	100	135	200	300	495	830
1150	. . .	60	80	125	185	310	515
1200	. . .	35	45	70	105	170	285

Reprinted from ASME B16.5-1996 and 1998, by permission of The American Society of Mechanical Engineers. All rights reserved

TABLE 2-1.14 RATINGS FOR GROUP 1.14 MATERIALS

Nominal Designation	Forgings	Castings	Plates
9Cr–1Mo	A 182 Gr. F9	A 217 Gr. C12 (1)	

NOTE:
(1) Use normalized and tempered material only.

WORKING PRESSURES BY CLASSES, psig

Class Temp., °F	150	300	400	600	900	1500	2500
–20 to 100	290	750	1000	1500	2250	3750	6250
200	260	750	1000	1500	2250	3750	6250
300	230	730	970	1455	2185	3640	6070
400	200	705	940	1410	2115	3530	5880
500	170	665	885	1330	1995	3325	5540
600	140	605	805	1210	1815	3025	5040
650	125	590	785	1175	1765	2940	4905
700	110	570	755	1135	1705	2840	4730
750	95	530	710	1065	1595	2660	4430
800	80	510	675	1015	1525	2540	4230
850	65	485	650	975	1460	2435	4060
900	50	450	600	900	1350	2245	3745
950	35	375	505	755	1130	1885	3145
1000	20	255	340	505	760	1270	2115
1050	. . .	170	230	345	515	855	1430
1100	. . .	115	150	225	340	565	945
1150	. . .	75	100	150	225	375	630
1200	. . .	50	70	105	155	255	430

Reprinted from ASME B16.5-1996 and 1998, by permission of The American Society of Mechanical Engineers. All rights reserved

TABLE 2-1.15 RATINGS FOR GROUP 1.15 MATERIALS

Nominal Designation	Forgings	Castings	Plates
9Cr–1Mo–V	A 182 Gr. F91	A 217 Gr. C12A	A 387 Gr. 91 Cl. 2

WORKING PRESSURES BY CLASSES, psig							
Class Temp., °F	150	300	400	600	900	1500	2500
–20 to 100	290	750	1000	1500	2250	3750	6250
200	260	750	1000	1500	2250	3750	6250
300	230	730	970	1455	2185	3640	6070
400	200	705	940	1410	2115	3530	5880
500	170	665	885	1330	1995	3325	5540
600	140	605	805	1210	1815	3025	5040
650	125	590	785	1175	1765	2940	4905
700	110	570	755	1135	1705	2840	4730
750	95	530	710	1065	1595	2660	4430
800	80	510	675	1015	1525	2540	4230
850	65	485	650	975	1460	2435	4060
900	50	450	600	900	1350	2245	3745
950	35	385	515	775	1160	1930	3220
1000	20	365	485	725	1090	1820	3030
1050	. . .	360	480	720	1080	1800	3000
1100	. . .	300	400	605	905	1510	2515
1150	. . .	225	295	445	670	1115	1855
1200	. . .	145	190	290	430	720	1200

Reprinted from ASME B16.5-1996 and 1998, by permission of The American Society of Mechanical Engineers. All rights reserved

TABLE 2-2.1 RATINGS FOR GROUP 2.1 MATERIALS

Nominal Designation	Forgings	Castings	Plates
18Cr–8Ni	A 182 Gr. F304 (1)	A 351 Gr. CF3 (2)	A 240 Gr. 304 (1)
	A 182 Gr. F304H	A 351 Gr. CF8 (1)	A 240 Gr. 304H

NOTES:
(1) At temperatures over 1000°F, use only when the carbon content is 0.04% or higher.
(2) Not to be used over 800°F.

WORKING PRESSURES BY CLASSES, psig

Class Temp., °F	150	300	400	600	900	1500	2500
-20 to 100	275	720	960	1440	2160	3600	6000
200	230	600	800	1200	1800	3000	5000
300	205	540	720	1080	1620	2700	4500
400	190	495	660	995	1490	2485	4140
500	170	465	620	930	1395	2330	3880
600	140	435	580	875	1310	2185	3640
650	125	430	575	860	1290	2150	3580
700	110	425	565	850	1275	2125	3540
750	95	415	555	830	1245	2075	3460
800	80	405	540	805	1210	2015	3360
850	65	395	530	790	1190	1980	3300
900	50	390	520	780	1165	1945	3240
950	35	380	510	765	1145	1910	3180
1000	20	320	430	640	965	1605	2675
1050	. . .	310	410	615	925	1545	2570
1100	. . .	255	345	515	770	1285	2145
1150	. . .	200	265	400	595	995	1655
1200	. . .	155	205	310	465	770	1285
1250	. . .	115	150	225	340	565	945
1300	. . .	85	115	170	255	430	715
1350	. . .	60	80	125	185	310	515
1400	. . .	50	65	90	145	240	400
1450	. . .	35	45	70	105	170	285
1500	. . .	25	35	55	80	135	230

Reprinted from ASME B16.5-1996 and 1998, by permission of The American Society of Mechanical Engineers. All rights reserved

TABLE 2-2.2 RATINGS FOR GROUP 2.2 MATERIALS

Nominal Designation	Forgings	Castings	Plates
16Cr–12Ni–2Mo	A 182 Gr. F316 (1) A 182 Gr. F316H	A 351 Gr. CF3M (2) A 351 Gr. CF8M (1)	A 240 Gr. 316 (1) A 240 Gr. 316H
18Cr–13Ni–3Mo			A 240 Gr. 317 (1)
19Cr–10Ni–3Mo		A 351 Gr. CG8M (3)	

NOTES:
(1) At temperatures over 1000°F, use only when the carbon content is 0.04% or higher.
(2) Not to be used over 850°F.
(3) Not to be used over 1000°F.

WORKING PRESSURES BY CLASSES, psig

Class Temp., °F	150	300	400	600	900	1500	2500
–20 to 100	275	720	960	1440	2160	3600	6000
200	235	620	825	1240	1860	3095	5160
300	215	560	745	1120	1680	2795	4660
400	195	515	685	1025	1540	2570	4280
500	170	480	635	955	1435	2390	3980
600	140	450	600	900	1355	2255	3760
650	125	445	590	890	1330	2220	3700
700	110	430	580	870	1305	2170	3620
750	95	425	570	855	1280	2135	3560
800	80	420	565	845	1265	2110	3520
850	65	420	555	835	1255	2090	3480
900	50	415	555	830	1245	2075	3460
950	35	385	515	775	1160	1930	3220
1000	20	350	465	700	1050	1750	2915
1050	. . .	345	460	685	1030	1720	2865
1100	. . .	305	405	610	915	1525	2545
1150	. . .	235	315	475	710	1185	1970
1200	. . .	185	245	370	555	925	1545
1250	. . .	145	195	295	440	735	1230
1300	. . .	115	155	235	350	585	970
1350	. . .	95	130	190	290	480	800
1400	. . .	75	100	150	225	380	630
1450	. . .	60	80	115	175	290	485
1500	. . .	40	55	85	125	205	345

Reprinted from ASME B16.5-1996 and 1998, by permission of The American Society of Mechanical Engineers. All rights reserved

TABLE 2-2.3 RATINGS FOR GROUP 2.3 MATERIALS

Nominal Designation	Forgings	Castings	Plates
16Cr–12Ni–2Mo	A 182 Gr. F316L		A 240 Gr. 316L
18Cr–8Ni	A 182 Gr. F304L (1)		A 240 Gr. 304L (1)

NOTE:
(1) Not to be used over 800°F.

WORKING PRESSURES BY CLASSES, psig							
Class Temp., °F	150	300	400	600	900	1500	2500
–20 to 100	230	600	800	1200	1800	3000	5000
200	195	505	675	1015	1520	2530	4220
300	175	455	605	910	1360	2270	3780
400	160	415	550	825	1240	2065	3440
500	145	380	510	765	1145	1910	3180
600	140	360	480	720	1080	1800	3000
650	125	350	470	700	1050	1750	2920
700	110	345	460	685	1030	1715	2860
750	95	335	450	670	1010	1680	2800
800	80	330	440	660	985	1645	2740
850	65	320	430	645	965	1610	2680

Reprinted from ASME B16.5-1996 and 1998, by permission of The American Society of Mechanical Engineers. All rights reserved

TABLE 2-2.4 RATINGS FOR GROUP 2.4 MATERIALS

Nominal Designation	Forgings	Castings	Plates
18Cr–10Ni–Ti	A 182 Gr. F321 (2) A 182 Gr. F321H (1)		A 240 Gr. 321 (2) A 240 Gr. 321H (1)

NOTES:
(1) At temperatures over 1000°F, use only if the material is heat treated by heating to a minimum temperature of 2000°F.
(2) Not to be used over 1000°F.

WORKING PRESSURES BY CLASSES, psig

Class Temp., °F	150	300	400	600	900	1500	2500
–20 to 100	275	720	960	1440	2160	3600	6000
200	245	645	860	1290	1935	3230	5380
300	230	595	795	1190	1785	2975	4960
400	200	550	735	1105	1655	2760	4600
500	170	515	685	1030	1545	2570	4285
600	140	485	650	975	1460	2435	4060
650	125	480	635	955	1435	2390	3980
700	110	465	620	930	1395	2330	3880
750	95	460	610	915	1375	2290	3820
800	80	450	600	900	1355	2255	3760
850	65	445	595	895	1340	2230	3720
900	50	440	590	885	1325	2210	3680
950	35	385	515	775	1160	1930	3220
1000	20	355	475	715	1070	1785	2970
1050	. . .	315	415	625	940	1565	2605
1100	. . .	270	360	545	815	1360	2265
1150	. . .	235	315	475	710	1185	1970
1200	. . .	185	245	370	555	925	1545
1250	. . .	140	185	280	420	705	1170
1300	. . .	110	145	220	330	550	915
1350	. . .	85	115	170	255	430	715
1400	. . .	65	85	130	195	325	545
1450	. . .	50	70	105	155	255	430
1500	. . .	40	50	75	115	190	315

Reprinted from ASME B16.5-1996 and 1998, by permission of The American Society of Mechanical Engineers. All rights reserved

TABLE 2-2.5 RATINGS FOR GROUP 2.5 MATERIALS

Nominal Designation	Forgings	Castings	Plates
18Cr–10Ni–Cb	A 182 Gr. F347 (2) A 182 Gr. F347H (1) A 182 Gr. F348 (2) A 182 Gr. F348H (1)	A 351 Gr. CF8C (3)	A 240 Gr. 347 (2) A 240 Gr. 347H (1) A 240 Gr. 348 (2) A 240 Gr. 348H (1)

NOTES:
(1) For temperatures over 1000°F, use only if the material is heat treated by heating to a minimum temperature of 2000°F.
(2) Not to be used over 1000°F.
(3) At temperatures over 1000°F, use the material only when the carbon content is 0.04% or higher.

WORKING PRESSURES BY CLASSES, psig

Class Temp., °F	150	300	400	600	900	1500	2500
–20 to 100	275	720	960	1440	2160	3600	6000
200	255	660	880	1320	1980	3300	5500
300	230	615	820	1230	1845	3070	5120
400	200	575	765	1145	1720	2870	4780
500	170	540	720	1080	1620	2700	4500
600	140	515	685	1025	1540	2570	4280
650	125	505	670	1010	1510	2520	4200
700	110	495	660	990	1485	2470	4120
750	95	490	655	985	1475	2460	4100
800	80	485	650	975	1460	2435	4060
850	65	485	645	970	1455	2425	4040
900	50	450	600	900	1350	2245	3745
950	35	385	515	775	1160	1930	3220
1000	20	365	485	725	1090	1820	3030
1050	. . .	360	480	720	1080	1800	3000
1100	. . .	325	430	645	965	1610	2685
1150	. . .	275	365	550	825	1370	2285
1200	. . .	170	230	345	515	855	1430
1250	. . .	125	165	245	370	615	1030
1300	. . .	95	125	185	280	465	770
1350	. . .	70	90	135	205	345	570
1400	. . .	55	75	110	165	275	455
1450	. . .	40	55	80	125	205	345
1500	. . .	35	45	70	105	170	285

Reprinted from ASME B16.5-1996 and 1998, by permission of The American Society of Mechanical Engineers. All rights reserved

TABLE 2-2.6 RATINGS FOR GROUP 2.6 MATERIALS

Nominal Designation	Forgings	Castings	Plates
23Cr–12Ni			A 240 Gr. 309S (1)(2)(3) A 240 Gr. 309H
25Cr–12Ni		A 351 Gr. CH8 (1) A 351 Gr. CH20 (1)	

NOTES:
(1) At temperatures over 1000°F, use only when the carbon content is 0.04% or higher.
(2) For temperatures above 1000°F, use only if the material solution is heat treated to the minimum temperature specified in the specification but not lower than 1900°F, and quenching in water or rapidly cooling by other means.
(3) This material should be used for service temperatures 1050°F and above only when assurance is provided that grain size is not finer than ASTM 6.

WORKING PRESSURES BY CLASSES, psig

Class Temp., °F	150	300	400	600	900	1500	2500
–20 to 100	260	670	895	1345	2015	3360	5600
200	230	605	805	1210	1815	3025	5040
300	220	570	760	1140	1705	2845	4740
400	200	535	710	1065	1600	2665	4440
500	170	505	670	1010	1510	2520	4200
600	140	480	635	955	1435	2390	3980
650	125	465	620	930	1395	2330	3880
700	110	455	610	910	1370	2280	3800
750	95	445	595	895	1340	2230	3720
800	80	435	580	870	1305	2170	3620
850	65	425	565	850	1275	2125	3540
900	50	415	555	830	1245	2075	3460
950	35	385	515	775	1160	1930	3220
1000	20	335	450	670	1010	1680	2800
1050	. . .	290	390	585	875	1460	2430
1100	. . .	225	300	445	670	1115	1860
1150	. . .	170	230	345	515	860	1430
1200	. . .	130	175	260	390	650	1085
1250	. . .	100	135	200	300	495	830
1300	. . .	80	105	160	235	395	660
1350	. . .	60	80	115	175	290	485
1400	. . .	45	60	90	135	225	370
1450	. . .	30	40	60	95	155	260
1500	. . .	25	30	50	70	120	200

Reprinted from ASME B16.5-1996 and 1998, by permission of The American Society of Mechanical Engineers. All rights reserved

TABLE 2-2.7 RATINGS FOR GROUP 2.7 MATERIALS

Nominal Designation	Forgings	Castings	Plates
25Cr–20Ni	A 182 Gr. F310 (1)(3)	A 351 Gr. CK20 (1)	A 240 Gr. 310S (1)(2)(3) A 240 Gr. 310H

NOTES:
(1) At temperatures over 1000°F, use only when the carbon content is 0.04% or higher.
(2) For temperatures above 1000°F, use only if the material is heat treated by heating it to a temperature of at least 1900°F and quenching in water or rapidly cooling by other means.
(3) Service temperatures of 1050°F and above should be used only when assurance is provided that grain size is not finer than ASTM 6.

WORKING PRESSURES BY CLASSES, psig

Class Temp., °F	150	300	400	600	900	1500	2500
-20 to 100	260	670	895	1345	2015	3360	5600
200	235	605	810	1215	1820	3035	5060
300	220	570	760	1140	1705	2845	4740
400	200	535	715	1070	1605	2675	4460
500	170	505	675	1015	1520	2530	4220
600	140	480	640	960	1440	2400	4000
650	125	470	625	935	1405	2340	3900
700	110	455	610	910	1370	2280	3800
750	95	450	600	900	1345	2245	3740
800	80	435	580	875	1310	2185	3640
850	65	425	570	855	1280	2135	3560
900	50	420	555	835	1255	2090	3480
950	35	385	515	775	1160	1930	3220
1000	20	345	460	685	1030	1720	2865
1050	. . .	335	450	670	1010	1680	2800
1100	. . .	260	345	520	780	1305	2170
1150	. . .	190	250	375	565	945	1570
1200	. . .	135	185	275	410	685	1145
1250	. . .	105	135	205	310	515	855
1300	. . .	75	100	150	225	375	630
1350	. . .	60	80	115	175	290	485
1400	. . .	45	60	90	135	225	370
1450	. . .	35	45	65	100	165	275
1500	. . .	25	35	50	75	130	215

Reprinted from ASME B16.5-1996 and 1998, by permission of The American Society of Mechanical Engineers. All rights reserved

TABLE 2-2.8 RATINGS FOR GROUP 2.8 MATERIALS

Nominal Designation	Forgings	Castings	Plates
20Cr-18Ni-6Mo	A 182 Gr. F44	A 351 Gr. CK3MCuN	A 240 Gr. S31254
22Cr-5Ni-3Mo-N	A 182 Gr. F51 (1)		A 240 Gr. S31803 (1)
25Cr-7Ni-4Mo-N	A 182 Gr. F53 (1)		A 240 Gr. S32750 (1)
24Cr-10Ni-4Mo-V		A 351 Gr. CE8MN (1)	
25Cr-5Ni-2Mo-3Cu		A 351 Gr. CD4MCu (1)	
25Cr-7Ni-3.5Mo-W-Cb		A 351 Gr. CD3MWCuN (1)	
25Cr-7Ni-3.5Mo-N-Cu-W	A 182 Gr. F55 (1)		A 240 Gr. S32760 (1)

NOTE:
(1) This steel may become brittle after service at moderately elevated temperatures. Not to be used over 600°F.

WORKING PRESSURES BY CLASSES, psig

Class Temp., °F	150	300	400	600	900	1500	2500
-20 to 100	290	750	1000	1500	2250	3750	6250
200	260	720	960	1440	2160	3600	6000
300	230	665	885	1330	1995	3325	5540
400	200	615	820	1230	1845	3070	5120
500	170	575	770	1150	1730	2880	4800
600	140	555	740	1115	1670	2785	4640
650	125	550	735	1100	1650	2750	4580
700	110	540	725	1085	1625	2710	4520
750	95	530	710	1065	1595	2660	4430

Reprinted from ASME B16.5-1996 and 1998, by permission of The American Society of Mechanical Engineers. All rights reserved

TABLE 2-3.1 RATINGS FOR GROUP 3.1 MATERIALS

Nominal Designation	Forgings	Castings	Plates
35Ni-35Fe-20Cr-Cb	B 462 Gr. N08020 (1)		B 463 Gr. N08020 (1)

NOTE:
(1) Use annealed material only.

WORKING PRESSURES BY CLASSES, psig

Class Temp., °F	150	300	400	600	900	1500	2500
-20 to 100	290	750	1000	1500	2250	3750	6250
200	260	720	960	1440	2160	3600	6000
300	230	715	950	1425	2140	3565	5940
400	200	675	900	1345	2020	3365	5610
500	170	655	875	1310	1965	3275	5460
600	140	605	805	1210	1815	3025	5040
650	125	590	785	1175	1765	2940	4905
700	110	570	755	1135	1705	2840	4730
750	95	530	710	1065	1595	2660	4430
800	80	510	675	1015	1525	2540	4230

Reprinted from ASME B16.5-1996 and 1998, by permission of The American Society of Mechanical Engineers. All rights reserved

TABLE 2-3.2 RATINGS FOR GROUP 3.2 MATERIALS

Nominal Designation	Forgings	Castings	Plates
99.0Ni	B 160 Gr. N02200 (1)(2)		B 162 Gr. N02200 (1)

NOTES:
(1) Use annealed material only.
(2) The chemical composition, mechanical properties, heat treating requirements, and grain size requirements shall conform to the applicable ASTM specification. The manufacturing procedures, tolerances, tests, certification, and markings shall be in accordance with ASTM B 564.

WORKING PRESSURES BY CLASSES, psig

Class Temp., °F	150	300	400	600	900	1500	2500
-20 to 100	140	360	480	720	1080	1800	3000
200	140	360	480	720	1080	1800	3000
300	140	360	480	720	1080	1800	3000
400	140	360	480	720	1080	1800	3000
500	140	360	480	720	1080	1800	3000
600	140	360	480	720	1080	1800	3000

Reprinted from ASME B16.5-1996 and 1998, by permission of The American Society of Mechanical Engineers. All rights reserved

TABLE 2-3.3 RATINGS FOR GROUP 3.3 MATERIALS

Nominal Designation	Forgings	Castings	Plates
99.0Ni–Low C	B 160 Gr. N02201 (1)(2)		B 162 Gr. N02201 (1)

NOTES:
(1) Use annealed material only.
(2) The chemical composition, mechanical properties, heat treating requirements, and grain size requirements shall conform to the applicable ASTM specification. The manufacturing procedures, tolerances, tests, certification, and markings shall be in accordance with ASTM B 564.

WORKING PRESSURES BY CLASSES, psig

Class Temp., °F	150	300	400	600	900	1500	2500
–20 to 100	90	240	320	480	720	1200	2000
200	85	230	305	455	685	1140	1900
300	85	225	300	445	670	1115	1860
400	85	215	290	430	650	1080	1800
500	85	215	290	430	650	1080	1800
600	85	215	290	430	650	1080	1800
650	85	215	290	430	650	1080	1800
700	85	215	290	430	650	1080	1800
750	80	210	280	420	635	1055	1760
800	80	205	270	410	610	1020	1700
850	65	205	270	410	610	1020	1700
900	50	140	185	280	415	695	1155
950	35	115	150	230	345	570	950
1000	20	95	125	185	280	465	770
1050	...	75	100	150	220	370	615
1100	...	60	80	125	185	310	515
1150	...	45	60	95	140	230	385
1200	...	35	50	75	110	185	310

Reprinted from ASME B16.5-1996 and 1998, by permission of The American Society of Mechanical Engineers. All rights reserved

TABLE 2-3.4 RATINGS FOR GROUP 3.4 MATERIALS

Nominal Designation	Forgings	Castings	Plates
67Ni-30Cu	B 564 Gr. N04400 (1)		B 127 Gr. N04400 (1)
67Ni-30Cu-S	B 164 Gr. N04405 (1)(2)		

NOTES:
(1) Use annealed material only.
(2) The chemical composition, mechanical properties, heat treating requirements, and grain size requirements shall conform to the applicable ASTM specification. The manufacturing procedures, tolerances, tests, certification, and markings shall be in accordance with ASTM B 564.

WORKING PRESSURES BY CLASSES, psig

Class Temp., °F	150	300	400	600	900	1500	2500
-20 to 100	230	600	800	1200	1800	3000	5000
200	200	530	705	1055	1585	2640	4400
300	190	495	660	990	1485	2470	4120
400	185	480	635	955	1435	2390	3980
500	170	475	635	950	1435	2375	3960
600	140	475	635	950	1435	2375	3960
650	125	475	635	950	1435	2375	3960
700	110	475	635	950	1435	2375	3960
750	95	470	625	935	1405	2340	3900
800	80	460	610	915	1375	2290	3820
850	65	340	455	680	1020	1695	2830
900	50	245	330	495	740	1235	2055

Reprinted from ASME B16.5-1996 and 1998, by permission of The American Society of Mechanical Engineers. All rights reserved

TABLE 2-3.5 RATINGS FOR GROUP 3.5 MATERIALS

Nominal Designation	Forgings	Castings	Plates
72Ni-15Cr-8Fe	B 564 Gr. N06600 (1)		B 168 Gr. N06600 (1)

NOTE:
(1) Use annealed material only.

WORKING PRESSURES BY CLASSES, psig							
Class Temp., °F	150	300	400	600	900	1500	2500
-20 to 100	290	750	1000	1500	2250	3750	6250
200	260	750	1000	1500	2250	3750	6250
300	230	730	970	1455	2185	3640	6070
400	200	705	940	1410	2115	3530	5880
500	170	665	885	1330	1995	3325	5540
600	140	605	805	1210	1815	3025	5040
650	125	590	785	1175	1765	2940	4905
700	110	570	755	1135	1705	2840	4730
750	95	530	710	1065	1595	2660	4430
800	80	510	675	1015	1520	2540	4230
850	65	485	650	975	1460	2435	4060
900	50	450	600	900	1350	2245	3745
950	35	325	435	655	980	1635	2725
1000	20	215	290	430	650	1080	1800
1050	. . .	140	185	280	415	695	1155
1100	. . .	95	125	185	280	465	770
1150	. . .	70	90	135	205	340	565
1200	. . .	60	80	125	185	310	515

Reprinted from ASME B16.5-1996 and 1998, by permission of The American Society of Mechanical Engineers. All rights reserved

TABLE 2-3.6 RATINGS FOR GROUP 3.6 MATERIALS

Nominal Designation	Forgings	Castings	Plates
33Ni–42Fe–21Cr	B 564 Gr. N08800 (1)		B 409 Gr. N08800 (1)

NOTE:
(1) Use annealed material only.

WORKING PRESSURES BY CLASSES, psig

Class Temp., °F	150	300	400	600	900	1500	2500
–20 to 100	275	720	960	1440	2160	3600	6000
200	255	660	885	1325	1990	3310	5520
300	230	625	830	1250	1870	3120	5200
400	200	600	800	1200	1800	3000	5000
500	170	580	770	1155	1735	2890	4820
600	140	575	765	1145	1720	2870	4780
650	125	570	760	1140	1705	2845	4740
700	110	565	750	1130	1690	2820	4700
750	95	530	710	1065	1595	2650	4430
800	80	505	675	1015	1520	2535	4230
850	65	485	650	975	1460	2435	4060
900	50	450	600	900	1350	2245	3745
950	35	385	515	775	1160	1930	3220
1000	20	365	485	725	1090	1820	3030
1050	. . .	360	480	720	1080	1800	3000
1100	. . .	325	430	645	965	1610	2685
1150	. . .	275	365	550	825	1370	2285
1200	. . .	205	270	405	610	1020	1695
1250	. . .	130	175	260	390	650	1080
1300	. . .	60	80	125	185	310	515
1350	. . .	50	65	100	150	245	410
1400	. . .	35	45	70	100	170	285
1450	. . .	30	40	60	95	155	255
1500	. . .	25	35	50	75	125	205

Reprinted from ASME B16.5-1996 and 1998, by permission of The American Society of Mechanical Engineers. All rights reserved

TABLE 2-3.7 RATINGS FOR GROUP 3.7 MATERIALS

Nominal Designation	Forgings	Castings	Plates
65Ni–28Mo–2Fe	B 335 Gr. N10665 (1)(2)		B 333 Gr. N10665 (1)

NOTES:
(1) Use solution annealed material only.
(2) The chemical composition, mechanical properties, heat treating requirements, and grain size requirements shall conform to the applicable ASTM specification. The manufacturing procedures, tolerances, tests, certification, and markings shall be in accordance with ASTM B 564.

WORKING PRESSURES BY CLASSES, psig

Class Temp., °F	150	300	400	600	900	1500	2500
–20 to 100	290	750	1000	1500	2250	3750	6250
200	260	750	1000	1500	2250	3750	6250
300	230	730	970	1455	2185	3640	6070
400	200	705	940	1410	2115	3530	5880
500	170	665	885	1330	1995	3325	5540
600	140	605	805	1210	1815	3025	5040
650	125	590	785	1175	1765	2940	4905
700	110	570	755	1135	1705	2840	4730
750	95	530	710	1065	1595	2660	4430
800	80	510	675	1015	1520	2540	4230

Reprinted from ASME B16.5-1996 and 1998, by permission of The American Society of Mechanical Engineers. All rights reserved

TABLE 2-3.8 RATINGS FOR GROUP 3.8 MATERIALS

Nominal Designation	Forgings	Castings	Plates
54Ni-16Mo-15Cr	B 564 Gr. N10276 (1)(4)		B 575 Gr. N10276 (1)(4)
60Ni-22Cr-9Mo-3.5Cb	B 564 Gr. N06625 (3)(5)		B 443 Gr. N06625 (3)(5)
62Ni-28Mo-5Fe	B 335 Gr. N10001 (1)(2)(6)		B 333 Gr. N10001 (1)(6)
70Ni-16Mo-7Cr-5Fe	B 573 Gr. N10003 (2)(3)		B 434 Gr. N10003 (3)
61Ni-16Mo-16Cr	B 574 Gr. N06455 (1)(2)(6)		B 575 Gr. N06455 (1)(6)
42Ni-21.5Fe-3Cr-2.3Cu	B 564 Gr. N08825 (3)(7)		B 424 Gr. N08825 (3)(7)

NOTES:
(1) Use solution annealed material only.
(2) The chemical composition, mechanical properties, heat treating requirements, and grain size requirements shall conform to the applicable ASTM specification. The manufacturing procedures, tolerances, tests, certification, and markings shall be in accordance with ASTM B 564.
(3) Use annealed material only.
(4) Not to be used over 1250°F.
(5) Not to be used over 1200°F. Alloy N06625 in the annealed condition is subject to severe loss of impact strength at room temperatures after exposure in the range of 1000°F to 1400°F.
(6) Not to be used over 800°F.
(7) Not to be used over 1000°F.

WORKING PRESSURES BY CLASSES, psig

Class Temp., °F	150	300	400	600	900	1500	2500
-20 to 100	290	750	1000	1500	2250	3750	6250
200	260	750	1000	1500	2250	3750	6250
300	230	730	970	1455	2185	3640	6070
400	200	705	940	1410	2115	3530	5880
500	170	665	885	1330	1995	3325	5540
600	140	605	805	1210	1815	3025	5040
650	125	590	785	1175	1765	2940	4905
700	110	570	755	1135	1705	2840	4730
750	95	530	710	1065	1595	2660	4430
800	80	510	675	1015	1520	2540	4230
850	65	485	650	975	1460	2435	4060
900	50	450	600	900	1350	2245	3745
950	35	385	515	775	1160	1930	3220
1000	20	365	485	725	1090	1820	3030
1050	...	360	480	720	1080	1800	3000
1100	...	325	430	645	965	1610	2685
1150	...	275	365	550	825	1370	2285
1200	...	185	245	370	555	925	1545
1250	...	145	195	295	440	735	1220
1300	...	110	145	215	325	540	900

Reprinted from ASME B16.5-1996 and 1998, by permission of The American Society of Mechanical Engineers. All rights reserved

TABLE 2-3.9 RATINGS FOR GROUP 3.9 MATERIALS

Nominal Designation	Forgings	Castings	Plates
47Ni-22Cr-9Mo-18Fe	B 572 Gr. N06002 (1)(2)		B 435 Gr. N06002 (1)

NOTES:
(1) Use solution annealed material only.
(2) The chemical composition, mechanical properties, heat treating requirements, and grain size requirements shall conform to the applicable ASTM specification. The manufacturing procedures, tolerances, tests, certification, and markings shall be in accordance with ASTM B 564.

WORKING PRESSURES BY CLASSES, psig

Class Temp., °F	150	300	400	600	900	1500	2500
−20 to 100	290	750	1000	1500	2250	3750	6250
200	260	750	1000	1500	2250	3750	6250
300	230	680	905	1360	2040	3395	5660
400	200	600	795	1195	1795	2990	4980
500	170	575	770	1150	1730	2880	4800
600	140	560	745	1120	1680	2795	4660
650	125	560	745	1120	1680	2795	4660
700	110	560	745	1120	1680	2795	4660
750	95	530	710	1065	1595	2660	4430
800	80	510	675	1015	1525	2540	4230
850	65	485	650	975	1460	2435	4060
900	50	450	600	900	1350	2245	3745
950	35	385	515	775	1160	1930	3220
1000	20	365	485	725	1090	1820	3030
1050	. . .	360	480	720	1080	1800	3000
1100	. . .	325	430	645	965	1610	2685
1150	. . .	275	365	550	825	1370	2285
1200	. . .	205	275	410	620	1030	1715
1250	. . .	180	245	365	545	910	1515
1300	. . .	140	185	275	410	685	1145
1350	. . .	105	140	205	310	515	860
1400	. . .	75	100	150	225	380	630
1450	. . .	60	80	115	175	290	485
1500	. . .	40	55	85	125	205	345

Reprinted from ASME B16.5-1996 and 1998, by permission of The American Society of Mechanical Engineers. All rights reserved

TABLE 2-3.10 RATINGS FOR GROUP 3.10 MATERIALS

Nominal Designation	Forgings	Castings	Plates
25Ni–46Fe–21Cr–5Mo	B 672 Gr. N08700 (1)(2)		B 599 Gr. N08700 (1)

NOTES:
(1) Use solution annealed material only.
(2) The chemical composition, mechanical properties, heat treating requirements, and grain size requirements shall conform to the applicable ASTM specification. The manufacturing procedures, tolerances, tests, certification, and markings shall be in accordance with ASTM B 564.

WORKING PRESSURES BY CLASSES, psig

Class Temp., °F	150	300	400	600	900	1500	2500
−20 to 100	275	720	960	1440	2160	3600	6000
200	260	720	960	1440	2160	3600	6000
300	230	680	905	1360	2040	3400	5670
400	200	640	855	1280	1920	3205	5340
500	170	610	815	1225	1835	3060	5100
600	140	595	790	1190	1780	2970	4950
650	125	570	760	1140	1705	2845	4740

Reprinted from ASME B16.5-1996 and 1998, by permission of The American Society of Mechanical Engineers. All rights reserved

TABLE 2-3.11 RATINGS FOR GROUP 3.11 MATERIALS

Nominal Designation	Forgings	Castings	Plates
44Fe-25Ni-21Cr-Mo	B 649 Gr. N08904 (1)(2)		B 625 Gr. N08904 (1)

NOTES:
(1) Use annealed material only.
(2) The chemical composition, mechanical properties, heat treating requirements, and grain size requirements shall conform to the applicable ASTM specification. The manufacturing procedures, tolerances, tests, certification, and markings shall be in accordance with ASTM B 564.

WORKING PRESSURES BY CLASSES, psig

Class Temp., °F	150	300	400	600	900	1500	2500
−20 to 100	245	640	855	1280	1920	3205	5340
200	230	600	800	1200	1805	3005	5010
300	210	545	725	1085	1630	2720	4530
400	190	495	660	995	1490	2485	4140
500	170	455	610	915	1370	2285	3810
600	140	430	575	865	1295	2160	3600
650	125	420	560	840	1265	2105	3510
700	110	410	545	820	1230	2050	3420

Reprinted from ASME B16.5-1996 and 1998, by permission of The American Society of Mechanical Engineers. All rights reserved

TABLE 2-3.12 RATINGS FOR GROUP 3.12 MATERIALS

Nominal Designation	Forgings	Castings	Plates
26Ni–43Fe–22Cr–5Mo	B 621 Gr. N08320 (1)(2)		B 620 Gr. N08320 (1)
47Ni–22Cr–20Fe–7Mo	B 581 Gr. N06985 (1)(2)		B 582 Gr. N06985 (1)

NOTES:
(1) Use solution annealed material only.
(2) The chemical composition, mechanical properties, heat treating requirements, and grain size requirements shall conform to the applicable ASTM specification. The manufacturing procedures, tolerances, tests, certification, and markings shall be in accordance with ASTM B 564.

WORKING PRESSURES BY CLASSES, psig

Class Temp., °F	150	300	400	600	900	1500	2500
–20 to 100	260	670	895	1345	2015	3360	5600
200	240	625	830	1245	1870	3115	5190
300	225	585	780	1175	1760	2935	4890
400	200	535	715	1075	1610	2680	4470
500	170	500	665	1000	1500	2500	4170
600	140	475	635	950	1425	2375	3960
650	125	465	620	930	1395	2320	3870
700	110	450	600	900	1350	2250	3750
750	95	445	590	885	1330	2215	3690
800	80	430	575	865	1295	2160	3600

Reprinted from ASME B16.5-1996 and 1998, by permission of The American Society of Mechanical Engineers. All rights reserved

TABLE 2-3.13 RATINGS FOR GROUP 3.13 MATERIALS

Nominal Designation	Forgings	Castings	Plates
49Ni–25Cr–18Fe–6Mo	B 581 Gr. N06975 (1)(2)		B 582 Gr. N06975 (1)
Ni–Fe–Cr–Mo–Low Cu	B 564 Gr. N08031 (3)		B 625 Gr. N08031 (3)

NOTES:
(1) Use solution annealed material only.
(2) The chemical composition, mechanical properties, heat treating requirements, and grain size requirements shall conform to the applicable ASTM specification. The manufacturing procedures, tolerances, tests, certification, and markings shall be in accordance with ASTM B 564.
(3) Use annealed material only.

WORKING PRESSURES BY CLASSES, psig

Class Temp., °F	150	300	400	600	900	1500	2500
–20 to 100	290	750	1000	1500	2250	3750	6250
200	260	705	940	1410	2115	3530	5880
300	230	660	885	1325	1985	3310	5520
400	200	635	845	1265	1900	3170	5280
500	170	595	790	1190	1780	2970	4950
600	140	560	750	1125	1685	2810	4680
650	125	555	735	1105	1660	2765	4605
700	110	545	725	1085	1630	2720	4530
750	95	530	710	1065	1595	2660	4430
800	80	510	675	1015	1525	2540	4230

Reprinted from ASME B16.5-1996 and 1998, by permission of The American Society of Mechanical Engineers. All rights reserved

TABLE 2-3.14 RATINGS FOR GROUP 3.14 MATERIALS

Nominal Designation	Forgings	Castings	Plates
47Ni-22Cr-19Fe-6	MoB 581 Gr. N06007 (1)(2)		B 582 Gr. N06007 (1)

NOTES:
(1) Use solution annealed material only.
(2) The chemical composition, mechanical properties, heat treating requirements, and grain size requirements shall conform to the applicable ASTM specification. The manufacturing procedures, tolerances, tests, certification, and markings shall be in accordance with ASTM B 564.

WORKING PRESSURES BY CLASSES, psig

Class Temp., °F	150	300	400	600	900	1500	2500
−20 to 100	275	720	960	1440	2160	3600	6000
200	245	645	860	1290	1935	3230	5380
300	230	600	795	1195	1795	2990	4980
400	200	560	750	1125	1685	2810	4680
500	170	535	715	1070	1605	2675	4460
600	140	520	690	1035	1555	2590	4320
650	125	510	680	1020	1535	2555	4260
700	110	505	675	1015	1520	2530	4220
750	95	500	670	1005	1505	2510	4180
800	80	495	660	995	1490	2485	4140
850	65	485	650	975	1460	2435	4060
900	50	450	600	900	1350	2245	3745
950	35	385	515	775	1160	1930	3220
1000	20	365	485	725	1090	1820	3030

Reprinted from ASME B16.5-1996 and 1998, by permission of The American Society of Mechanical Engineers. All rights reserved

TABLE 2-3.15 RATINGS FOR GROUP 3.15 MATERIALS

Nominal Designation	Forgings	Castings	Plates
33Ni–42Fe–21Cr	B 564 Gr. N08810 (1)		B 409 Gr. N08810 (1)

NOTE:
(1) Use solution annealed material only.

WORKING PRESSURES BY CLASSES, psig

Class Temp., °F	150	300	400	600	900	1500	2500
–20 to 100	230	600	800	1200	1800	3000	5000
200	205	540	720	1080	1620	2700	4500
300	195	505	675	1015	1520	2530	4220
400	185	480	640	960	1440	2400	4000
500	170	455	610	910	1370	2280	3800
600	140	440	585	880	1320	2195	3660
650	125	425	565	850	1275	2125	3540
700	110	420	560	840	1260	2100	3500
750	95	415	550	825	1240	2065	3440
800	80	410	545	815	1225	2040	3400
850	65	400	530	795	1195	1990	3320
900	50	395	530	790	1190	1980	3300
950	35	385	515	775	1160	1930	3220
1000	20	365	485	725	1090	1820	3030
1050	...	325	435	650	975	1625	2710
1100	...	320	430	640	965	1605	2675
1150	...	275	365	550	825	1370	2285
1200	...	205	275	410	620	1030	1715
1250	...	180	245	365	545	910	1515
1300	...	140	185	275	410	685	1145
1350	...	105	140	205	310	515	860
1400	...	75	100	150	225	380	630
1450	...	60	80	115	175	290	485
1500	...	40	55	85	125	205	345

Reprinted from ASME B16.5-1996 and 1998, by permission of The American Society of Mechanical Engineers. All rights reserved

TABLE 2-3.16 RATINGS FOR GROUP 3.16 MATERIALS

Nominal Designation	Forgings	Castings	Plates
35Ni–19Cr–1¼Si	B 511 Gr. N08330 (1)(2)		B 536 Gr. N08330 (1)

NOTES:
(1) Use solution annealed material only.
(2) The chemical composition, mechanical properties, heat treating requirements, and grain size requirements shall conform to the applicable ASTM specification. The manufacturing procedures, tolerances, tests, certification, and markings shall be in accordance with ASTM B 564.

WORKING PRESSURES BY CLASSES, psig

Class Temp., °F	150	300	400	600	900	1500	2500
–20 to 100	275	720	960	1440	2160	3600	6000
200	245	635	850	1270	1910	3180	5300
300	225	590	785	1175	1765	2940	4900
400	200	550	735	1105	1655	2760	4600
500	170	525	700	1050	1575	2630	4380
600	140	500	670	1005	1505	2510	4180
650	125	490	655	980	1470	2450	4080
700	110	480	645	965	1445	2410	4020
750	95	470	625	940	1410	2350	3920
800	80	465	620	925	1390	2315	3860
850	65	455	605	905	1360	2270	3780
900	50	445	590	885	1330	2215	3690
950	35	385	515	775	1160	1930	3220
1000	20	365	485	725	1090	1820	3030
1050	...	310	410	615	925	1545	2570
1100	...	240	320	480	720	1205	2005
1150	...	185	245	370	555	925	1545
1200	...	145	195	290	435	725	1210
1250	...	115	155	235	350	585	975
1300	...	95	130	190	285	480	795
1350	...	75	100	150	220	370	615
1400	...	55	75	110	165	280	465
1450	...	45	60	95	140	230	385
1500	...	35	45	70	100	170	285

Reprinted from ASME B16.5-1996 and 1998, by permission of The American Society of Mechanical Engineers. All rights reserved

TABLE 2-3.17 RATINGS FOR GROUP 3.17 MATERIAL

Nominal Designation	Forgings	Castings	Plates
29Ni–20.5Cr–3.5Cu–2.5Mo		A 351 Gr. CN7M (1)	

NOTE:
(1) Use solution annealed material only.

WORKING PRESSURES BY CLASSES, psig							
Class Temp., °F	150	300	400	600	900	1500	2500
-20 to 100	230	600	800	1200	1800	3000	5000
200	200	520	690	1035	1555	2590	4320
300	180	465	620	930	1395	2330	3880
400	160	420	565	845	1265	2110	3520
500	150	390	520	780	1165	1945	3240
600	140	360	480	720	1080	1800	3000

Reprinted from ASME B16.5-1996 and 1998, by permission of The American Society of Mechanical Engineers. All rights reserved

TABLE D-7

CHARACTERISTICS OF TUBING

Tube O.D. Inches	B.W.G. Gage	Thickness Inches	Internal Area Sq. Inch	Sq. Ft. External Surface Per Foot Length	Sq. Ft. Internal Surface Per Foot Length	Weight Per Ft. Length Steel Lbs.*	Tube I.D. Inches	Moment of Inertia Inches^4	Section Modulus Inches^3	Radius of Gyration Inches	Constant C**	O.D. / I.D.	Transverse Metal Area Sq. Inch
1/4	22	0.028	0.0296	0.0654	0.0508	0.066	0.194	0.00012	0.00098	0.0791	46	1.289	0.0195
	24	0.022	0.0333	0.0654	0.0539	0.054	0.206	0.00010	0.00083	0.0810	52	1.214	0.0158
	26	0.018	0.0360	0.0654	0.0560	0.045	0.214	0.00009	0.00071	0.0823	56	1.168	0.0131
	27	0.016	0.0373	0.0654	0.0571	0.040	0.218	0.00008	0.00065	0.0829	58	1.147	0.0118
3/8	18	0.049	0.0603	0.0982	0.0725	0.171	0.277	0.00068	0.0036	0.1166	94	1.354	0.0502
	20	0.035	0.0731	0.0982	0.0798	0.127	0.305	0.00055	0.0029	0.1208	114	1.230	0.0374
	22	0.028	0.0799	0.0982	0.0835	0.104	0.319	0.00046	0.0025	0.1231	125	1.176	0.0305
	24	0.022	0.0860	0.0982	0.0867	0.083	0.331	0.00038	0.0020	0.1250	134	1.133	0.0244
1/2	16	0.065	0.1075	0.1309	0.0969	0.302	0.370	0.0021	0.0086	0.1555	168	1.351	0.0888
	18	0.049	0.1269	0.1309	0.1052	0.236	0.402	0.0018	0.0071	0.1604	198	1.244	0.0694
	20	0.035	0.1452	0.1309	0.1126	0.174	0.430	0.0014	0.0056	0.1649	227	1.163	0.0511
	22	0.028	0.1548	0.1309	0.1162	0.141	0.444	0.0012	0.0046	0.1672	241	1.126	0.0415
5/8	12	0.109	0.1301	0.1636	0.1066	0.601	0.407	0.0061	0.0197	0.1865	203	1.536	0.177
	13	0.095	0.1486	0.1636	0.1139	0.538	0.435	0.0057	0.0183	0.1904	232	1.437	0.158
	14	0.083	0.1655	0.1636	0.1202	0.481	0.459	0.0053	0.0170	0.1939	258	1.362	0.141
	15	0.072	0.1817	0.1636	0.1259	0.426	0.481	0.0049	0.0156	0.1972	283	1.299	0.125
	16	0.065	0.1924	0.1636	0.1296	0.389	0.495	0.0045	0.0145	0.1993	300	1.263	0.114
	17	0.058	0.2035	0.1636	0.1333	0.352	0.509	0.0042	0.0134	0.2015	317	1.228	0.103
	18	0.049	0.2181	0.1636	0.1380	0.302	0.527	0.0037	0.0119	0.2044	340	1.186	0.089
	19	0.042	0.2299	0.1636	0.1416	0.262	0.541	0.0033	0.0105	0.2067	359	1.155	0.077
	20	0.035	0.2419	0.1636	0.1453	0.221	0.555	0.0028	0.0091	0.2090	377	1.126	0.065
3/4	10	0.134	0.1825	0.1963	0.1262	0.833	0.482	0.0129	0.0344	0.2229	285	1.556	0.259
	11	0.120	0.2043	0.1963	0.1335	0.808	0.510	0.0122	0.0326	0.2267	319	1.471	0.238
	12	0.109	0.2223	0.1963	0.1393	0.747	0.532	0.0116	0.0309	0.2299	347	1.410	0.219
	13	0.095	0.2463	0.1963	0.1466	0.665	0.560	0.0107	0.0285	0.2340	384	1.339	0.195
	14	0.083	0.2679	0.1963	0.1529	0.592	0.584	0.0098	0.0262	0.2376	418	1.284	0.174
	15	0.072	0.2884	0.1963	0.1587	0.522	0.606	0.0089	0.0238	0.2411	450	1.238	0.153
	16	0.065	0.3019	0.1963	0.1623	0.476	0.620	0.0083	0.0221	0.2433	471	1.210	0.140
	17	0.058	0.3157	0.1963	0.1660	0.429	0.634	0.0076	0.0203	0.2455	492	1.183	0.126
	18	0.049	0.3339	0.1963	0.1707	0.367	0.652	0.0067	0.0178	0.2484	521	1.150	0.108
	20	0.035	0.3632	0.1963	0.1780	0.268	0.680	0.0050	0.0134	0.2531	567	1.103	0.079
7/8	10	0.134	0.2894	0.2291	0.1589	1.062	0.607	0.0221	0.0505	0.2662	451	1.442	0.312
	11	0.120	0.3167	0.2291	0.1662	0.969	0.635	0.0208	0.0475	0.2703	494	1.378	0.285
	12	0.109	0.3390	0.2291	0.1720	0.893	0.657	0.0196	0.0449	0.2736	529	1.332	0.262
	13	0.095	0.3685	0.2291	0.1793	0.792	0.685	0.0180	0.0411	0.2778	575	1.277	0.233
	14	0.083	0.3948	0.2291	0.1856	0.703	0.709	0.0164	0.0374	0.2815	616	1.234	0.207
	15	0.072	0.4197	0.2291	0.1914	0.618	0.731	0.0148	0.0337	0.2850	655	1.197	0.182
	16	0.065	0.4359	0.2291	0.1950	0.563	0.745	0.0137	0.0312	0.2873	680	1.174	0.165
	17	0.058	0.4525	0.2291	0.1987	0.507	0.759	0.0125	0.0285	0.2896	706	1.153	0.149
	18	0.049	0.4742	0.2291	0.2034	0.433	0.777	0.0109	0.0249	0.2925	740	1.126	0.127
	20	0.035	0.5090	0.2291	0.2107	0.314	0.805	0.0082	0.0187	0.2972	794	1.087	0.092
1	8	0.165	0.3526	0.2618	0.1754	1.473	0.670	0.0392	0.0784	0.3009	550	1.493	0.433
	10	0.134	0.4208	0.2618	0.1916	1.241	0.732	0.0350	0.0700	0.3098	656	1.366	0.365
	11	0.120	0.4536	0.2618	0.1990	1.129	0.760	0.0327	0.0654	0.3140	708	1.316	0.332
	12	0.109	0.4803	0.2618	0.2047	1.038	0.782	0.0307	0.0615	0.3174	749	1.279	0.305
	13	0.095	0.5153	0.2618	0.2121	0.919	0.810	0.0280	0.0559	0.3217	804	1.235	0.270
	14	0.083	0.5463	0.2618	0.2183	0.814	0.834	0.0253	0.0507	0.3255	852	1.199	0.239
	15	0.072	0.5755	0.2618	0.2241	0.714	0.856	0.0227	0.0455	0.3291	898	1.168	0.210
	16	0.065	0.5945	0.2618	0.2278	0.650	0.870	0.0210	0.0419	0.3314	927	1.149	0.191
	18	0.049	0.6390	0.2618	0.2361	0.498	0.902	0.0166	0.0332	0.3367	997	1.109	0.146
	20	0.035	0.6793	0.2618	0.2435	0.361	0.930	0.0124	0.0247	0.3414	1060	1.075	0.106
1-1/4	7	0.180	0.6221	0.3272	0.2330	2.059	0.890	0.0890	0.1425	0.3836	970	1.404	0.605
	8	0.165	0.6648	0.3272	0.2409	1.914	0.920	0.0847	0.1355	0.3880	1037	1.359	0.562
	10	0.134	0.7574	0.3272	0.2571	1.599	0.982	0.0742	0.1187	0.3974	1182	1.273	0.470
	11	0.120	0.8012	0.3272	0.2644	1.450	1.010	0.0688	0.1100	0.4018	1250	1.238	0.426
	12	0.109	0.8365	0.3272	0.2702	1.330	1.032	0.0642	0.1027	0.4052	1305	1.211	0.391
	13	0.095	0.8825	0.3272	0.2775	1.173	1.060	0.0579	0.0926	0.4097	1377	1.179	0.345
	14	0.083	0.9229	0.3272	0.2838	1.036	1.084	0.0521	0.0833	0.4136	1440	1.153	0.304
	16	0.065	0.9852	0.3272	0.2932	0.824	1.120	0.0426	0.0682	0.4196	1537	1.116	0.242
	18	0.049	1.0423	0.3272	0.3016	0.629	1.152	0.0334	0.0534	0.4250	1626	1.085	0.185
	20	0.035	1.0936	0.3272	0.3089	0.455	1.180	0.0247	0.0395	0.4297	1706	1.059	0.134
1-1/2	10	0.134	1.1921	0.3927	0.3225	1.957	1.232	0.1354	0.1806	0.4853	1860	1.218	0.575
	12	0.109	1.2908	0.3927	0.3356	1.621	1.282	0.1159	0.1545	0.4933	2014	1.170	0.476
	14	0.083	1.3977	0.3927	0.3492	1.257	1.334	0.0931	0.1241	0.5018	2180	1.124	0.369
	16	0.065	1.4741	0.3927	0.3587	0.997	1.370	0.0756	0.1008	0.5079	2300	1.095	0.293
2	11	0.120	2.4328	0.5236	0.4608	2.412	1.760	0.3144	0.3144	0.6660	3795	1.136	0.709
	12	0.109	2.4941	0.5236	0.4665	2.204	1.782	0.2904	0.2904	0.6697	3891	1.122	0.648
	13	0.095	2.5730	0.5236	0.4739	1.935	1.810	0.2586	0.2586	0.6744	4014	1.105	0.569
	14	0.083	2.6417	0.5236	0.4801	1.701	1.834	0.2300	0.2300	0.6784	4121	1.091	0.500

* Weights are based on low carbon steel with a density of 0.2836 lbs./cu. in. For other metals multiply by the following factors:

Aluminum	0.35	Aluminum Bronze	1.04	Nickel	1.13
Titanium	0.58	Aluminum Brass	1.06	Nickel-Copper	1.12
A.I.S.I. 400 Series S/Steels	0.99	Nickel-Chrome-Iron	1.07	Copper and Cupro-Nickels	1.14
A.I.S.I. 300 Series S/Steels	1.02	Admiralty	1.09		

** Liquid Velocity = $\frac{\text{lbs. Per Tube Hour}}{\text{C x Sp. Gr. of Liquid}}$ in feet per sec. (Sp. Gr. of Water at 60°F. = 1.0)

TABLE D-7M

CHARACTERISTICS OF TUBING

Tube O.D. mm	B.W.G. Gage	Thickness mm	Internal Area Sq. Cm.	Sq. M External Surface Per M Length	Sq. M Internal Surface Per M Length	Weight Per M length Steel Kg.*	Tube I.D. mm	Moment of Inertia cm^4	Section Modulus cm^3	Radius of Gyration mm	Constant C**	O.D. / I.D.	Transverse Metal Area Sq. Cm.
6.35	22	0.711	0.1910	0.0199	0.0155	0.098	4.93	0.0050	0.0161	2.009	69	1.289	0.1258
	24	0.559	0.2148	0.0199	0.0164	0.080	5.23	0.0042	0.0136	2.057	77	1.214	0.1019
	26	0.457	0.2323	0.0199	0.0171	0.067	5.44	0.0037	0.0116	2.090	84	1.168	0.8452
	27	0.406	0.2406	0.0199	0.0174	0.060	5.54	0.0033	0.0107	2.106	87	1.147	0.0761
9.53	18	1.245	0.3890	0.0299	0.0221	0.254	7.04	0.0283	0.0590	2.962	140	1.354	0.3239
	20	0.889	0.4716	0.0299	0.0243	0.189	7.75	0.0229	0.0475	3.068	170	1.230	0.2413
	22	0.711	0.5155	0.0299	0.0255	0.155	8.10	0.0191	0.0410	3.127	185	1.176	0.1968
	24	0.559	0.5548	0.0299	0.0264	0.124	8.41	0.0158	0.0328	3.175	200	1.133	0.1574
12.7	16	1.651	0.6935	0.0399	0.0295	0.449	9.40	0.0874	0.1409	3.950	250	1.351	0.5729
	18	1.245	0.8187	0.0399	0.0321	0.351	10.21	0.0749	0.1163	4.074	295	1.244	0.4477
	20	0.889	0.9368	0.0399	0.0343	0.259	10.92	0.0583	0.0918	4.188	337	1.163	0.3297
	22	0.711	0.9987	0.0399	0.0360	0.210	11.28	0.0499	0.0787	4.247	359	1.126	0.2677
15.88	12	2.769	0.8394	0.0499	0.0325	0.894	10.34	0.2539	0.3228	4.737	302	1.536	1.1419
	13	2.413	0.9587	0.0499	0.0347	0.801	11.05	0.2373	0.2999	4.836	345	1.437	1.0194
	14	2.108	1.0677	0.0499	0.0366	0.716	11.66	0.2206	0.2786	4.925	384	1362	0.9097
	15	1.829	1.1723	0.0499	0.0384	0.634	12.22	0.2040	0.2556	5.009	422	1.299	0.8065
	16	1.651	1.2413	0.0499	0.0395	0.579	12.57	0.1873	0.2376	5.062	447	1.263	0.7355
	17	1.473	1.3129	0.0499	0.0406	0.524	12.93	0.1748	0.2196	5.118	472	1.228	0.6645
	18	1.245	1.4071	0.0499	0.0421	0.449	13.39	0.1540	0.1950	5.192	506	1.186	0.5742
	19	1.067	1.4832	0.0499	0.0432	0.390	13.74	0.1374	0.1721	5.250	534	1.155	0.4968
	20	0.889	1.5606	0.0499	0.0443	0.329	14.10	0.1165	0.1491	5.309	562	1.126	0.4194
19.05	10	3.404	1.1774	0.0598	0.0385	1.240	12.24	0.5369	0.5637	5.662	424	1.556	1.6710
	11	3.048	1.3181	0.0598	0.0407	1.202	12.95	0.5078	0.5342	5.758	474	1.471	1.5355
	12	2.769	1.4342	0.0598	0.0425	1.112	13.51	0.4828	0.5064	5.839	516	1.410	1.4129
	13	2.413	1.5890	0.0598	0.0447	0.990	14.22	0.4454	0.4670	5.944	572	1.339	1.2581
	14	2.108	1.7284	0.0598	0.0466	0.881	14.83	0.4079	0.4293	6.035	622	1.284	1.1226
	15	1.829	1.8606	0.0598	0.0484	0.777	15.39	0.3704	0.3900	6.124	670	1.238	0.9871
	16	1.651	1.9477	0.0598	0.0495	0.708	15.75	0.3455	0.3622	6.180	701	1.210	0.9032
	17	1.473	2.0368	0.0598	0.0506	0.638	16.10	0.3163	0.3327	6.236	733	1.183	0.8129
	18	1.245	2.1542	0.0598	0.0520	0.546	16.56	0.2789	0.2917	6.309	775	1.150	0.6968
	20	0.889	2.3432	0.0598	0.0543	0.399	17.27	0.2081	0.2196	6.429	843	1.103	0.5097
22.23	10	3.404	1.8671	0.0698	0.0484	1.580	15.42	0.9199	0.8276	6.761	672	1.442	2.0129
	11	3.048	2.0432	0.0698	0.0507	1.442	16.13	0.8658	0.7784	6.866	735	1.378	1.8387
	12	2.769	2.1871	0.0698	0.0524	1.329	16.69	0.8158	0.7358	6.949	787	1.332	1.6903
	13	2.413	2.3774	0.0698	0.0547	1.179	17.40	0.7492	0.6735	7.056	855	1.277	1.5032
	14	2.108	2.5471	0.0698	0.0566	1.046	18.01	0.6826	0.6129	7.150	917	1.234	1.3355
	15	1.829	2.7077	0.0698	0.0583	0.920	18.57	0.6160	0.5522	7.239	974	1.197	1.1742
	16	1.651	2.8123	0.0698	0.0594	0.838	18.92	0.5702	0.5113	7.297	1012	1.174	1.0645
	17	1.473	2.9193	0.0698	0.0606	0.754	19.28	0.5203	0.4670	7.356	1050	1.153	0.9613
	18	1.245	3.0593	0.0698	0.0620	0.644	19.74	0.4537	0.4080	7.429	1101	1.126	0.8194
	20	0.889	3.2839	0.0698	0.0642	0.467	20.45	0.3413	0.3064	7.549	1182	1.087	0.5935
25.4	8	4.191	2.2748	0.0798	0.0535	2.192	17.02	1.6316	1.2848	7.643	819	1.493	2.7935
	10	3.404	2.7148	0.0798	0.0584	1.847	18.59	1.4568	1.1471	7.869	977	1.366	2.3548
	11	3.048	2.9264	0.0798	0.0607	1.680	19.30	1.3611	1.0717	7.976	1053	1.316	2.1419
	12	2.769	3.0987	0.0798	0.0624	1.545	19.86	1.2778	1.0078	8.062	1115	1.279	1.9677
	13	2.413	3.3245	0.0798	0.0646	1.368	20.57	1.1655	0.9160	8.171	1196	1.235	1.7419
	14	2.108	3.5245	0.0798	0.0665	1.211	21.18	1.0531	0.8308	8.268	1268	1.199	1.5419
	15	1.829	3.7129	0.0798	0.0683	1.063	21.74	0.9449	0.7456	8.359	1336	1.168	1.3548
	16	1.651	3.8355	0.0798	0.0694	0.967	22.10	0.8741	0.6866	8.418	1380	1.149	1.2323
	18	1.245	4.1226	0.0798	0.0720	0.741	22.91	0.6909	0.5441	8.555	1483	1.109	0.9419
	20	0.889	4.3826	0.0798	0.0742	0.537	23.62	0.5161	0.4048	8.672	1577	1.075	0.6839
31.75	7	4.572	4.0135	0.0997	0.0710	3.064	22.61	3.7045	2.3352	9.743	1444	1.404	3.9032
	8	4.191	4.2890	0.0997	0.0734	2.848	23.37	3.5255	2.2205	9.855	1543	1.359	3.6258
	10	3.404	4.8864	0.0997	0.0784	2.380	24.94	3.0885	1.9452	10.094	1758	1.273	3.0323
	11	3.048	5.1690	0.0997	0.0806	2.158	25.65	2.8637	1.8026	10.206	1860	1.238	2.7484
	12	2.769	5.3968	0.0997	0.0824	1.979	26.21	2.6722	1.6830	10.292	1942	1.211	2.5226
	13	2.413	5.6935	0.0997	0.0846	1.746	26.92	2.4100	1.5175	10.406	2049	1.179	2.2258
	14	2.108	5.9542	0.0997	0.0865	1.542	27.53	2.1686	1.3651	10.505	2143	1.153	1.9613
	16	1.651	6.3561	0.0997	0.0894	1.226	28.45	1.7732	1.1176	10.658	2287	1.116	1.5613
	18	1.245	6.7245	0.0997	0.0919	0.936	29.26	1.3902	0.8751	10.795	2420	1.085	1.1935
	20	0.889	7.0555	0.0997	0.0942	0.677	29.97	1.0281	0.6473	10.914	2539	1.059	0.8645
33.1	10	3.404	7.6910	0.1197	0.0983	2.912	31.29	5.6358	2.9595	12.327	2768	1.218	3.7097
	12	2.769	8.3277	0.1197	0.1023	2.412	32.56	4.8242	2.5318	12.530	2997	1.170	3.0710
	14	2.108	9.0174	0.1197	0.1064	1.871	33.88	3.8751	2.0336	12.746	3245	1.124	2.3806
	16	1.651	9.5103	0.1197	0.1093	1.484	34.80	3.1467	1.6518	12.901	3422	1.095	1.8903
50.8	11	3.048	15.6955	0.1596	0.1405	3.589	44.70	13.0864	5.1521	16.916	5648	1.136	4.5742
	12	2.769	16.0909	0.1596	0.1422	3.280	45.26	12.0874	4.7588	17.010	5790	1.122	4.1806
	13	2.413	16.6000	0.1596	0.1444	2.880	45.97	10.7638	4.2377	17.130	5973	1.105	3.6710
	14	2.108	17.0432	0.1596	0.1463	2.531	46.58	9.5734	3.7690	17.231	6133	1.091	3.2258

* Weights are based on low carbon steel with a density of 7.85 gm/cu.cm. For other metals multiply by the following factors:

Aluminum	0.35	Aluminum Bronze	1.04	Nickel	1.13
Titanium	0.58	Aluminum Brass	1.06	Nickel-Copper	1.12
A.I.S.I. 400 Series S/Steels	0.99	Nickel-Chrome-Iron	1.07	Copper and Cupro-Nickels	1.14
A.I.S.I. 300 Series S/Steels	1.02	Admirality	1.09		

** Liquid Velocity = $\frac{\text{kg. Per Tube Hour}}{\text{C x Sp. Gr. of Liquid}}$ in meters per sec. (Sp. Gr. of Water at 15.6 deg C = 1.0)

TABLE D-8

HARDNESS CONVERSION TABLE

APPROXIMATE RELATION BETWEEN VARIOUS HARDNESS TESTING SYSTEMS AND TENSILE STRENGTH OF CARBON AND ALLOY STEELS

Tensile Strength 1000 Lbs. psi	Brinell Hardness Number 3000-Kg. Load	Brinell Indentation Diameter mm.	ROCKWELL HARDNESS NUMBER					Diamond Pyramid Hardness Number	Sclero-scope Hardness Number	Tensile Strength 1000 Lbs. psi
			A-Scale, 60-Kg. Load, Brale Penetrator	B-Scale, 100-Kg. Load, 1/16" Dia. Ball	C-Scale, 150-Kg. Load, Brale Penetrator	D-Scale, 100-Kg. Load, Brale Penetrator	15N-Scale, 15-Kg. Load, Superficial Brale Penetrator			
384	780	2.20	....	....	....	....	....	....	....	384
368	745	2.25	....	....	65	....	....	840	91	368
352	712	2.30	....	....	64	....	....	785	87	352
337	682	2.35	82	....	62	72	91	737	84	337
324	653	2.40	81	....	60	71	90	697	81	324
323	627	2.45	81	....	59	70	90	667	79	323
318	601	2.50	81	....	59	70	90	677	77	318
309	578	2.55	80	....	57	69	89	640	75	309
293	555	2.60	79	....	56	67	88	607	73	293
279	534	2.65	78	....	54	66	88	579	71	279
266	514	2.70	77	....	53	65	87	553	70	266
259	495	2.75	77	....	52	64	86	539	68	259
247	477	2.80	76	....	50	63	86	516	66	247
237	461	2.85	75	....	49	62	85	495	65	237
226	444	2.90	74	....	47	61	84	474	63	226
217	429	2.95	73	....	46	60	83	455	61	217
210	415	3.00	73	....	45	59	83	440	59	210
202	401	3.05	72	....	43	58	82	425	58	202
195	388	3.10	71	....	42	57	81	410	56	195
188	375	3.15	71	....	40	56	81	396	54	188
182	363	3.20	70	....	39	55	80	383	52	182
176	352	3.25	69	....	38	54	79	372	51	176
170	341	3.30	69	....	37	53	79	360	50	170
166	331	3.35	68	....	36	52	78	350	48	166
160	321	3.40	68	....	34	51	77	339	47	160
155	311	3.45	67	....	33	50	77	328	46	155
150	302	3.50	66	....	32	49	76	319	45	150
145	293	3.55	66	....	31	48	76	309	43	145
141	285	3.60	65	....	30	48	75	301	42	141
137	277	3.65	65	....	29	47	74	292	41	137
133	269	3.70	64	....	28	46	74	284	40	133
129	262	3.75	64	....	27	45	73	276	39	129
126	255	3.80	63	....	25	44	73	269	38	126
122	248	3.85	63	....	24	43	72	261	37	122
118	241	3.90	62	100	23	42	71	253	36	118
115	235	3.95	61	99	22	41	70	247	35	115
111	229	4.00	60	98	21	41	70	241	34	111
110	223	4.05	60	97	20	....	....	223	32	110
107	217	4.10	59	96	....	....	....	217	31	107
104	212	4.15	59	96	....	....	....	212	31	104
101	207	4.20	58	95	....	....	....	207	30	101
99	202	4.25	58	94	....	....	....	202	30	99
97	197	4.30	57	93	....	....	....	197	29	97
95	192	4.35	57	92	....	....	....	192	28	95
93	187	4.40	56	91	....	....	....	187	28	93
91	183	4.45	56	90	....	....	....	183	27	91
89	179	4.50	55	89	....	....	....	179	27	89
87	174	4.55	54	88	....	....	....	174	26	87
85	170	4.60	54	87	....	....	....	170	26	85
83	166	4.65	53	86	....	....	....	166	25	83
82	163	4.70	53	85	....	....	....	163	25	82
80	159	4.75	52	84	....	....	....	159	24	80
78	156	4.80	51	83	....	....	....	156	24	78
76	153	4.85	51	82	....	....	....	153	23	76
75	149	4.90	50	81	....	....	....	149	23	75
74	146	4.95	50	80	....	....	....	146	22	74
72	143	5.00	49	79	....	....	....	143	22	72
71	140	5.05	49	78	....	....	....	140	21	71
70	137	5.10	48	77	....	....	....	137	21	70
68	134	5.15	47	76	....	....	....	134	21	68
66	131	5.20	46	74	....	....	....	131	20	66
65	128	5.25	46	73	....	....	....	128	20	65

NOTE: Brinell 128 to 495 with Standard Ball. Brinell 514 to 601 with Hultgren Ball. Brinell 627 to 682 with Carbide Ball.
References: ASTM E140-76, ASM Metals Handbook Vol. 1, 8th Edition.

TABLE D-9

INTERNAL WORKING PRESSURES (PSI) OF TUBES AT VARIOUS VALUES OF ALLOWABLE STRESS

Tube O.D. Inches	Tube Gage BWG	Code Allowable Stress (PSI)									
		2,000	4,000	6,000	8,000	10,000	12,000	14,000	16,000	18,000	20,000
1/4	27	269	539	809	1079	1349	1618	1888	2158	2428	2698
	26	305	611	916	1222	1528	1833	2139	2444	2750	3056
	24	378	757	1135	1514	1893	2271	2650	3029	3407	3786
	23	434	869	1304	1739	2173	2608	3043	3478	3913	4347
	22	492	984	1476	1968	2460	2952	3444	3936	4428	4920
	21	570	1140	1711	2281	2852	3422	3992	4563	5133	5704
	20	630	1261	1891	2522	3153	3783	4414	5045	5675	6306
	19	776	1552	2329	3105	3881	4658	5434	6210	6987	7763
	18	929	1859	2789	3719	4648	5578	6508	7438	8368	9297
3/8	24	246	492	738	984	1231	1477	1723	1969	2216	2462
	22	317	635	952	1270	1588	1905	2223	2541	2858	3176
	21	366	732	1099	1465	1831	2198	2564	2930	3297	3663
	20	403	806	1210	1613	2017	2420	2824	3227	3631	4034
	19	492	984	1476	1968	2460	2952	3444	3936	4428	4920
	18	583	1167	1751	2334	2918	3502	4085	4669	5253	5836
	17	706	1412	2118	2824	3530	4236	4942	5648	6354	7060
	16	804	1609	2414	3219	4024	4829	5634	6439	7244	8049
	15	907	1814	2722	3629	4536	5444	6351	7258	8166	9073
	14	1075	2151	3227	4303	5379	6454	7530	8606	9682	10758
1/2	22	234	469	703	938	1172	1407	1641	1876	2110	2345
	20	296	593	889	1186	1483	1779	2076	2372	2669	2966
	19	360	720	1080	1440	1801	2161	2521	2881	3241	3602
	18	425	850	1276	1701	2126	2552	2977	3402	3828	4253
	17	511	1022	1534	2045	2557	3068	3580	4091	4603	5114
	16	580	1160	1741	2321	2901	3482	4062	4642	5223	5803
	15	650	1301	1952	2603	3254	3905	4556	5207	5858	6509
	14	765	1531	2297	3062	3828	4594	5359	6125	6891	7656
	13	896	1792	2688	3584	4481	5377	6273	7169	8066	8962
	12	1056	2112	3168	4224	5281	6337	7393	8449	9505	10562
5/8	20	234	469	703	938	1172	1407	1641	1876	2110	2345
	19	284	568	852	1136	1420	1704	1988	2272	2556	2840
	18	334	669	1003	1338	1672	2007	2342	2676	3011	3345
	17	400	801	1202	1603	2004	2405	2806	3207	3608	4009
	16	453	907	1361	1815	2268	2722	3176	3630	4083	4537
	15	507	1015	1522	2030	2537	3045	3553	4060	4568	5075
	14	594	1188	1783	2377	2971	3566	4160	4754	5349	5943
	13	692	1384	2076	2768	3460	4153	4845	5537	6229	6921
	12	810	1621	2432	3242	4053	4864	5674	6485	7296	8107
	11	907	1814	2722	3629	4536	5444	6351	7258	8166	9073
	10	1035	2070	3105	4140	5175	6210	7246	8281	9316	10351

TABLE D-9—(Continued)

INTERNAL WORKING PRESSURES (PSI) OF TUBES AT VARIOUS VALUES OF ALLOWABLE STRESS

Tube O.D. Inches	Tube Gage BWG	Code Allowable Stress (PSI)									
		2,000	4,000	6,000	8,000	10,000	12,000	14,000	16,000	18,000	20,000
3/4	20	193	387	581	775	969	1163	1357	1551	1745	1939
	18	275	551	827	1102	1378	1654	1930	2205	2481	2757
	17	329	659	989	1318	1648	1978	2308	2637	2967	3297
	16	372	744	1117	1489	1862	2234	2607	2979	3352	3724
	15	415	831	1247	1663	2079	2495	2911	3327	3743	4159
	14	485	971	1456	1942	2428	2913	3399	3885	4370	4856
	13	563	1127	1691	2255	2818	3382	3946	4510	5074	5637
	12	657	1315	1973	2631	3289	3946	4604	5262	5920	6578
	11	733	1467	2201	2935	3669	4403	5137	5871	6605	7339
	10	833	1667	2501	3335	4169	5003	5836	6670	7504	8338
	9	937	1874	2811	3749	4686	5623	6561	7498	8435	9373
	8	1067	2135	3203	4271	5339	6407	7475	8543	9611	10679
7/8	20	165	330	495	661	826	991	1157	1322	1487	1652
	18	234	469	703	938	1172	1407	1641	1876	2110	2345
	17	279	559	839	1119	1399	1679	1959	2239	2519	2799
	16	315	631	947	1263	1579	1895	2211	2527	2843	3159
	15	352	704	1057	1409	1761	2114	2466	2818	3171	3523
	14	410	821	1231	1642	2052	2463	2874	3284	3695	4105
	13	475	951	1426	1902	2377	2853	3329	3804	4280	4755
	12	553	1106	1660	2213	2767	3320	3874	4427	4980	5534
	11	616	1232	1848	2464	3080	3697	4313	4929	5545	6161
	10	698	1396	2094	2792	3490	4188	4886	5584	6282	6980
	9	782	1564	2347	3129	3912	4694	5477	6259	7042	7824
	8	888	1776	2664	3553	4441	5329	6218	7106	7994	8882
1	20	144	288	432	576	720	864	1008	1152	1296	1440
	18	203	407	611	815	1019	1223	1427	1631	1835	2039
	17	243	486	729	973	1216	1459	1703	1946	2189	2432
	16	274	548	822	1097	1371	1645	1919	2194	2468	2742
	15	305	611	916	1222	1528	1833	2139	2444	2750	3056
	14	355	711	1066	1422	1778	2133	2489	2844	3200	3556
	13	411	822	1233	1645	2056	2467	2878	3290	3701	4112
	12	477	955	1432	1910	2388	2865	3343	3821	4298	4776
	11	530	1061	1592	2123	2654	3185	3716	4247	4778	5309
	10	600	1200	1801	2401	3001	3602	4202	4802	5403	6003
	9	671	1343	2014	2686	3357	4029	4700	5372	6043	6715
	8	760	1520	2281	3041	3801	4562	5322	6082	6843	7603

TABLE D-9—(Continued)

INTERNAL WORKING PRESSURES (PSI) OF TUBES AT VARIOUS VALUES OF ALLOWABLE STRESS

Tube O.D. Inches	Tube Gage BWG	Code Allowable Stress (PSI)									
		2,000	4,000	6,000	8,000	10,000	12,000	14,000	16,000	18,000	20,000
1-1/4	20	114	229	343	458	572	687	801	916	1031	1145
	18	161	323	485	647	809	971	1133	1295	1456	1618
	16	217	434	651	868	1085	1302	1519	1736	1953	2170
	15	241	483	724	966	1207	1449	1690	1932	2173	2415
	14	280	561	841	1122	1402	1683	1963	2244	2524	2805
	13	323	647	971	1294	1618	1942	2265	2589	2913	3236
	12	374	749	1124	1499	1874	2249	2624	2999	3374	3749
	11	415	831	1247	1663	2079	2495	2911	3327	3743	4159
	10	469	938	1407	1876	2345	2814	3283	3752	4221	4690
	9	523	1046	1569	2092	2615	3138	3662	4185	4708	5231
	8	590	1180	1771	2361	2951	3542	4132	4722	5313	5903
	7	650	1301	1952	2603	3254	3905	4556	5207	5858	6509
1-1/2	14	231	463	694	926	1157	1389	1621	1852	2084	2315
	12	308	617	925	1234	1543	1851	2160	2468	2777	3086
	11	341	683	1025	1367	1709	2051	2393	2735	3076	3418
	10	384	769	1154	1539	1924	2309	2693	3078	3463	3848
	9	428	856	1285	1713	2142	2570	2999	3427	3856	4284
	8	482	964	1447	1929	2412	2894	3377	3859	4342	4824
2	14	171	343	515	686	858	1030	1201	1373	1545	1717
	12	227	455	683	911	1139	1367	1595	1823	2051	2279
	11	252	504	756	1008	1260	1512	1764	2016	2268	2521
	10	283	566	849	1132	1415	1699	1982	2265	2548	2831
	9	314	629	943	1258	1573	1887	2202	2517	2831	3146
	8	353	706	1059	1413	1766	2119	2473	2826	3179	3533

TABLE D-10
MODULUS OF ELASTICITY

MATERIAL \ TEMP. DEG. F.	PSI X 10^{+6}												
	70	100	200	300	400	500	600	700	800	900	1000	1100	1200
C STL, C-MO, MN-MO	29.2	29.0	28.5	28.0	27.4	27.0	26.4	25.3	23.9	22.2	20.1	17.8	15.3
AUSTENITIC STN STL	28.3	28.1	27.6	27.0	26.5	25.8	25.3	24.8	24.1	23.5	22.8	22.1	21.2
LOW CHROMES THRU 2%	29.7	29.5	29.0	28.5	27.9	27.5	26.9	26.3	25.5	24.8	23.9	23.0	21.8
2-1/4 CR-1 MO & 3 CR-1 MO	30.6	30.4	29.8	29.4	28.8	28.3	27.7	27.1	26.3	25.6	24.6	23.7	22.5
INT CR-MO (5-9% CR)	30.9	30.7	30.1	29.7	29.0	28.6	28.0	27.3	26.1	24.7	22.7	20.4	18.2
12, 13, 15 & 17% CR	29.2	29.0	28.5	27.9	27.3	26.7	26.1	25.6	24.7	23.2	21.5	19.1	16.6
LOW NI STEELS THRU 3-1/2%	27.8	27.6	27.1	26.7	26.1	25.7	25.2	24.6	23.0	21.4	19.7	17.5	15.3
NI-CU ALLOY 400 (N04400)	26.0	25.8	25.4	25.0	24.7	24.3	24.1	23.7	23.1	22.6	22.1	21.7	21.2
90-10 CU-NI (C70600)	18.0	17.9	17.6	17.3	16.9	16.6	16.0	15.4					
ALUMINUM	10.0	9.9	9.6	9.2	8.7	8.1							
NI-CR-FE ALLOY 600 (N06600)	31.0	30.8	30.2	29.9	29.5	29.0	28.7	28.2	27.6	27.0	26.4	25.9	25.3
NI-FE-CR (N08800 & N08810)	28.5	28.3	27.8	27.4	27.1	26.6	26.4	25.9	25.4	24.8	24.2	23.8	23.2
NI-MO ALLOY B (N10001)	31.1	30.9	30.3	29.9	29.5	29.1	28.8	28.3	27.7	27.1	26.4	26.0	25.3
NI-MO-CR ALLOY C-276 (N10276)	29.8	29.6	29.1	28.6	28.3	27.9	27.6	27.1	26.5	25.9	25.3	24.9	24.3
NICKEL 200 (N02200)	30.0	29.8	29.3	28.8	28.5	28.1	27.8	27.3	26.7	26.1	25.5	25.1	24.5
COPPER & AL-BRONZE	17.0	16.9	16.6	16.3	16.0	15.6	15.1	14.5					
COMMERCIAL BRASS	15.0	14.9	14.6	14.4	14.1	13.8	13.4	12.8					
ADMIRALTY	16.0	15.9	15.6	15.4	15.0	14.7	14.2	13.7					
TITANIUM	15.5	15.4	15.0	14.6	14.0	13.3	12.6	11.9	11.2				
70-30 CU-NI (C71500)	22.0	21.9	21.5	21.1	20.7	20.2	19.6	18.8					
NI-MO ALLOY B-2 (N10665)	31.4	31.2	30.6	30.1	29.8	29.3	29.0	28.6	27.9	27.3	26.7	26.2	25.6
NI-FE-CR-MO-CU (N08825)	28.0	27.8	27.3	26.9	26.6	26.2	25.9	25.5	24.9	24.4	23.8		
MUNTZ (C36500)	15.0	14.9	14.6	14.4	14.1	13.8	13.4	12.8					
ZIRCONIUM (R60702)	14.4	13.9	13.4	12.4	11.5	10.7	9.9						
NI-CR-MO-CB (N06625)	30.0	29.3	28.8	28.5	28.1	27.8	27.3	26.7	26.1	25.5	25.1	24.5	24.0
7 MO (S32900)	29.0	28.8	28.0	27.5									
7 MO PLUS (S32950)	29.0												
17-19 CR STN STL	29.0												
AL-6XN STN STL (N08367)	28.3	28.1	27.4	26.8	26.1	25.5	24.8	24.1	23.4	22.8	22.1		
AL-29-4-2	29.0												
SEA-CURE	31.0												
2205 (S31803)	29.0	28.8	28.2	27.6	27.0	26.6	26.2						
3RE60 (S31500)	29.0	28.7	27.5	26.8	26.0	25.3	24.5	23.8	23.0				

REFERENCES:
ASME SECTION II, D, 1998 EDITION
R.A. MOEN (COLLECTED PAPERS, LETTERS & DATA)
HUNTINGTON ALLOYS, INC. BULLETIN #15M1-76T-42
ALLEGHENY LUDLUM STEEL CORP.
CABOT-STELLITE
TELEDYNE WAH CHANG ALBANY
INTERNATIONAL NICKEL CO.
ASTM SPECIAL TECHNICAL PUBLICATION # 181
CARPENTER TECHNOLOGY
TRENT TUBE
AIRCO, INC.
SANDVIK TUBE

TABLE D-10 M
MODULUS OF ELASTICITY

MATERIAL \ TEMP. DEG. C.	kPa X 10^{+6}												
	21.1	37.8	93.3	148.9	204.4	260.0	315.6	371.1	426.7	482.2	537.8	593.3	648.9
C STL, C-MO, MN-MO	201.3	199.9	196.5	193.1	188.9	186.2	182.0	174.4	164.8	153.1	138.6	122.7	105.5
AUSTENITIC STN STL	195.1	193.7	190.3	186.2	182.7	177.9	174.4	171.0	166.2	162.0	157.2	152.4	146.2
LOW CHROMES THRU 2%	204.8	203.4	199.9	196.5	192.4	189.6	185.5	181.3	175.8	171.0	164.8	158.6	150.3
2-1/4 CR-1 MO & 3 CR-1 MO	211.0	209.6	205.5	202.7	198.6	195.1	191.0	186.8	181.3	176.5	169.6	163.4	155.1
INT CR-MO (5-9% CR)	213.0	211.7	207.5	204.8	199.9	197.2	193.1	188.2	180.0	170.3	156.5	140.7	125.5
12, 13, 15 & 17% CR	201.3	199.9	196.5	192.4	188.2	184.1	180.0	176.5	170.3	160.0	148.2	131.7	114.5
LOW NI STEELS THRU 3-1/2%	191.7	190.3	186.8	184.1	180.0	177.2	173.7	169.6	158.6	147.5	135.8	120.7	105.5
NI-CU ALLOY 400 (N04400)	179.3	177.9	175.1	172.4	170.3	167.5	166.2	163.4	159.3	155.8	152.4	149.6	146.2
90-10 CU-NI (C70600)	124.1	123.4	121.3	119.3	116.5	114.5	110.3	106.2					
ALUMINUM	68.9	68.3	66.2	63.4	60.0	55.8							
NI-CR-FE ALLOY 600 (N06600)	213.7	212.4	208.2	206.2	203.4	199.9	197.9	194.4	190.3	186.2	182.0	178.6	174.4
NI-FE-CR (N08800 & N08810)	196.5	195.1	191.7	188.9	186.8	183.4	182.0	178.6	175.1	171.0	166.9	164.1	160.0
NI-MO ALLOY B (N10001)	214.4	213.0	208.9	206.2	203.4	200.6	198.6	195.1	191.0	186.8	182.0	179.3	174.4
NI-MO-CR ALLOY C-276 (N10276)	205.5	204.1	200.6	197.2	195.1	192.4	190.3	186.8	182.7	178.6	174.4	171.7	167.5
NICKEL 200 (N02200)	206.8	205.5	202.0	198.6	196.5	193.7	191.7	188.2	184.1	180.0	175.8	173.1	168.9
COPPER & AL-BRONZE	117.2	116.5	114.5	112.4	110.3	107.6	104.1	100.0					
COMMERCIAL BRASS	103.4	102.7	100.7	99.3	97.2	95.1	92.4	88.3					
ADMIRALTY	110.3	109.6	107.6	106.2	103.4	101.4	97.9	94.5					
TITANIUM	106.9	106.2	103.4	100.7	96.5	91.7	86.9	82.0	77.2				
70-30 CU-NI (C71500)	151.7	151.0	148.2	145.5	142.7	139.3	135.1	129.6					
NI-MO ALLOY B-2 (N10665)	216.5	215.1	211.0	207.5	205.5	202.0	199.9	197.2	192.4	188.2	184.1	180.6	176.5
NI-FE-CR-MO-CU (N08825)	193.1	191.7	188.2	185.5	183.4	180.6	178.6	175.8	171.7	168.2	164.1		
MUNTZ (C36500)	103.4	102.7	100.7	99.3	97.2	95.1	92.4	88.2					
ZIRCONIUM (R60702)	99.3	95.8	92.4	85.5	79.3	73.8	68.3						
NI-CR-MO-CB (N06625)	206.8	202.0	198.6	196.5	193.7	191.7	188.2	184.1	180.0	175.8	173.1	168.9	165.5
7 MO (S32900)	199.9	198.6	193.1	189.6									
7 MO PLUS (S32950)	199.9												
TP 439 STN STL	199.9												
AL-6XN STN STL (N08367)	195.1	193.7	188.9	184.8	180.0	175.8	171.0	166.2	161.3	157.2	152.4		
AL-29-4-2	199.9												
SEA-CURE	213.7												
2205 (S31803)	199.9	198.5	194.4	190.3	186.1	183.4	180.6						
3RE60 (S31500)	199.9	197.9	189.6	184.8	179.2	174.4	168.9	164.1	158.6				

REFERENCES:
ASME SECTION II, D, 1998 EDITION
R.A. MOEN (COLLECTED PAPERS, LETTERS & DATA)
HUNTINGTON ALLOYS, INC. BULLETIN #15M1-76T-42
ALLEGHENY LUDLUM STEEL CORP.
CABOT-STELLITE
TELEDYNE WAH CHANG ALBANY
INTERNATIONAL NICKEL CO.
ASTM SPECIAL TECHNICAL PUBLICATION # 181
CARPENTER TECHNOLOGY
TRENT TUBE
AIRCO, INC.
SANDVIK TUBE

TABLE D-11
MEAN COEFFICIENTS OF THERMAL EXPANSION

MATERIAL \ TEMP. DEG. F.	INCHES PER INCH PER DEG F X 10^{-6} BETWEEN 70 F AND:															
	-200	-100	100	200	300	400	500	600	700	800	900	1000	1100	1200	1300	1400
PLAIN CARBON STL & C-MN STL	5.60	5.90	6.50	6.67	6.87	7.07	7.25	7.42	7.59	7.76	7.89					
C-SI STL, C-1/2 MO & 1 CR-1/2 MO	5.60	5.64	5.73	6.09	6.43	6.74	7.06	7.28	7.51	7.71	7.86	8.00				
C-MN-SI STL, 1 1/4-1/2 MO &3 CR-1 MO			5.53	5.89	6.26	6.61	6.91	7.17	7.41	7.59	7.77	7.94	8.07	8.24		
MN-MO STL	5.60	6.08	7.06	7.25	7.43	7.58	7.70	7.83	7.94	8.05	8.14	8.23				
2-1/2 & 3-1/2 NI			6.27	6.54	6.78	6.98	7.16	7.32	7.47	7.61						
2-1/4 CR-1 MO	5.60	5.90	6.50	6.70	6.90	7.07	7.23	7.38	7.50	7.62	7.72	7.82	7.90	7.97		
5 CR-1/2 MO	5.60	5.90	6.50	6.73	6.87	6.97	7.05	7.15	7.24	7.32	7.41	7.48	7.56	7.64		
7 CR-1/2 MO & 9 CR-1 MO	5.60	5.68	5.85	6.02	6.15	6.29	6.40	6.51	6.62	6.71	6.82	6.90	7.00	7.08		
12 CR & 13 CR	5.10	5.39	5.98	6.15	6.30	6.40	6.48	6.53	6.60	6.67	6.72	6.78	6.83	6.88		
15 CR & 17 CR	5.10	5.19	5.37	5.52	5.65	5.75	5.85	5.95	6.05	6.13	6.22	6.30	6.37	6.44		
17-19 CR (TP 439)				5.59	5.70	5.81	5.92	6.03	6.14	6.25	6.36	6.46	6.56	6.65	6.74	6.83
ALL GRADES OF TP 316 & 317 STN STL			8.54	8.76	8.97	9.21	9.42	9.60	9.76	9.90	10.02	10.16	10.29	10.40	10.52	10.62
ALL GRADES OF TP 304 STN STL			8.55	8.79	9.00	9.19	9.37	9.53	9.69	9.82	9.95	10.07	10.18	10.29	10.39	10.49
ALL GRADES OF TP 321 STN STL			9.02	9.16	9.26	9.34	9.42	9.48	9.55	9.61	9.67	9.73	9.79	9.85	9.90	9.95
ALL GRADES OF TP 347 STN STL			8.62	8.92	9.22	9.45	9.65	9.83	9.97	10.08	10.22	10.33	10.45	10.56	10.66	10.75
25 CR-12 NI, 23 CR-12 NI & 25 CR-20 NI			8.87	9.02	9.10	9.14	9.18	9.21	9.25	9.28	9.32	9.37	9.41	9.47	9.54	9.62
AL-6XN (N08367)				8.50	8.55	8.61	8.72	8.82	8.87	8.95	9.06	9.18	9.29	9.40	9.51	9.68
ALUMINUM (3003)	11.80	12.04	12.54	12.85	13.15	13.45										
ALUMINUM (6061)	11.80	12.06	12.60	12.91	13.22	13.52										
TITANIUM (GRADES 1,2,3 & 7)			4.65	4.70	4.75	4.80	4.85	4.90	4.97	5.05						
NI-CU (N04400)			7.78	8.08	8.33	8.54	8.69	8.81	8.88	8.91						
NI-CR-FE (N06600)			6.90	7.20	7.40	7.57	7.70	7.82	7.94	8.04						
NI-FE-CR (N08800 & N08810)			7.95	8.34	8.60	8.78	8.92	9.00	9.11	9.20	9.30	9.40				
NI-FE-CR-MO-CU (N08825)			7.53	7.71	7.85	7.97	8.09	8.20	8.30	8.40						
NI-MO (ALLOY B)			6.08	6.24	6.35	6.40	6.41	6.47	6.57	6.68						
NI-MO-CR (ALLOY C-276) (N10276)			6.06	6.30	6.50	6.71	6.91	7.08	7.22	7.33						
NICKEL (ALLOY 200) (N02200)	6.20	6.39	6.77	7.21	7.52	7.74	7.91	8.05	8.16	8.27	8.50	8.60	8.70	8.80	8.90	8.90
2205 (S31803)			7.00	7.00	7.25	7.50	7.65	7.80	7.90	8.00						
3RE60 (S31500)			8.03	8.25	8.45	8.61	8.76	8.90	9.04	9.16						
70-30 CU-NI (C71500)				8.50	8.70	8.90	9.10									
90-10 & 80-20 CU-NI					9.50											
COPPER	8.60	9.00	9.40	9.60	9.70	9.80	9.90	10.10	10.20	10.30	10.40	10.50				
BRASS	9.10	9.30	9.60	9.70	10.00	10.20	10.50	10.70	10.90	11.20	11.40	11.60	11.90	12.10		
ALUMINUM BRONZE							9.00									
7 MO (S32900)				5.60	6.00	6.10	6.20	6.35	6.50	6.69	6.88	7.06	7.25	7.44	7.63	7.81
7 MO PLUS (S32950)						6.39	6.67	6.94	7.22	7.49	7.68	7.88	7.98	8.08	8.12	8.16
COPPER-SILICON							10.00									
ADMIRALTY								11.20								
ZIRCONIUM			3.20		3.50	3.70	3.90		4.10							
CR-NI-FE-MO-CU-CB (ALLOY 20CB)			8.30	8.30							9.40				9.60	
NI-CR-MO-CB (ALLOY 625) (N06625)	5.20	6.20	6.70	7.12	7.20	7.30	7.35	7.45	7.52	7.60	7.70	7.80	8.00	8.20	8.35	8.50
AL 29-4-2				5.20												
SEA-CURE				5.38	5.43	5.62	5.81	5.88	5.95							

REFERENCES:

ASME SECTION II, D, 1998 EDITION
R.A. MOEN (COLLECTED PAPERS, LETTERS & DATA)
HUNTINGTON ALLOYS, INC. BULLETIN #15M1-76T-42
ALLEGHENY LUDLUM STEEL CORP.
CABOT-STELLITE
TELEDYNE WAH CHANG ALBANY
BRIDGEPORT BRASS COMPANY
SABIN CROCKER, PIPING HANDBOOK, 4TH EDITION
INTERNATIONAL NICKEL CO.
ASTM SPECIAL TECHNICAL PUBLICATION # 181
CARPENTER TECHNOLOGY
TRENT TUBE
AIRCO, INC.
SANDVIK TUBE
NATIONAL BUREAU OF STANDARDS
D.G. FURMAN, JOURNAL OF METALS

TABLE D-11 M
MEAN COEFFICIENTS OF THERMAL EXPANSION

MATERIAL \ TEMP. DEG. C.	mm PER mm PER DEG C X 10^{-6} BETWEEN 21.1 DEG C AND:															
	-128.9	-73.3	37.8	93.3	148.9	204.4	260.0	315.6	371.1	426.7	482.2	537.8	593.3	648.9	704.4	760.0
PLAIN CARBON STL & C-MN STL	10.08	10.62	11.70	12.01	12.37	12.73	13.05	13.36	13.66	13.97	14.20					
C-SI STL, C-1/2 MO & 1 CR-1/2 MO	10.08	10.15	10.31	10.96	11.57	12.13	12.71	13.10	13.52	13.88	14.15	14.40				
C-MN-SI STL, 1 1/4-1/2 MO &3 CR-1 MO			9.95	10.60	11.27	11.90	12.44	12.91	13.34	13.66	13.99	14.29	14.53	14.83		
MN-MO STL	10.08	10.94	12.71	13.05	13.37	13.64	13.86	14.09	14.29	14.49	14.65	14.81				
2-1/2 & 3-1/2 NI			11.29	11.77	12.20	12.56	12.89	13.18	13.45	13.70						
2-1/4 CR-1 MO	10.08	10.62	11.70	12.06	12.42	12.73	13.01	13.28	13.50	13.72	13.90	14.08	14.22	14.35		
5 CR-1/2 MO	10.08	10.62	11.70	12.11	12.37	12.55	12.69	12.87	13.03	13.18	13.34	13.46	13.61	13.75		
7 CR-1/2 MO & 9 CR-1 MO	10.08	10.22	10.53	10.84	11.07	11.32	11.52	11.72	11.92	12.08	12.28	12.42	12.60	12.74		
12 CR & 13 CR	9.18	9.70	10.76	11.07	11.34	11.52	11.66	11.75	11.88	12.01	12.10	12.20	12.29	12.38		
15 CR & 17 CR	9.18	9.34	9.67	9.94	10.17	10.35	10.53	10.71	10.89	11.03	11.20	11.34	11.47	11.59		
17-19 CR (TP 439)				10.06	10.26	10.46	10.66	10.85	11.05	11.25	11.45	11.63	11.81	11.97	12.13	12.29
ALL GRADES OF TP 316 & 317 STN STL			15.37	15.77	16.15	16.58	16.96	17.28	17.57	17.82	18.04	18.29	18.52	18.72	18.94	19.12
ALL GRADES OF TP 304 STN STL			15.39	15.82	16.20	16.54	16.87	17.15	17.44	17.68	17.91	18.13	18.32	18.52	18.70	18.88
ALL GRADES OF TP 321 STN STL			16.24	16.49	16.67	16.81	16.96	17.06	17.19	17.30	17.41	17.51	17.62	17.73	17.82	17.91
ALL GRADES OF TP 347 STN STL			15.52	16.06	16.60	17.01	17.37	17.69	17.95	18.14	18.40	18.59	18.81	19.01	19.19	19.35
25 CR-12 NI, 23 CR-12 NI & 25 CR-20 NI			15.97	16.24	16.38	16.45	16.52	16.58	16.65	16.70	16.78	16.87	16.94	17.05	17.17	17.32
AL-6XN (N08367)				15.30	15.39	15.50	15.70	15.88	15.97	16.11	16.31	16.52	16.72	16.92	17.12	17.42
ALUMINUM (3003)	21.24	21.67	22.57	23.13	23.67	24.21										
ALUMINUM (6061)	21.24	21.71	22.68	23.24	23.80	24.34										
TITANIUM (GRADES 1,2,3 & 7)			8.37	8.46	8.55	8.64	8.73	8.82	8.95	9.09						
NI-CU (N04400)			14.00	14.54	14.99	15.37	15.64	15.86	15.98	16.04						
NI-CR-FE (N06600)			12.42	12.96	13.32	13.63	13.86	14.08	14.29	14.47						
NI-FE-CR (N08800 & N08810)			14.31	15.01	15.48	15.80	16.06	16.20	16.40	16.56	16.74	16.92				
NI-FE-CR-MO-CU (N08825)			13.55	13.88	14.13	14.35	14.56	14.76	14.94	15.12						
NI-MO (ALLOY B)			10.94	11.23	11.43	11.52	11.54	11.65	11.83	12.02						
NI-MO-CR (ALLOY C-276) (N10276)			10.91	11.34	11.70	12.08	12.44	12.74	13.00	13.19						
NICKEL (ALLOY 200) (N02200)	11.16	11.50	12.19	12.98	13.54	13.93	14.24	14.49	14.69	14.89	15.30	15.48	15.66	15.84	16.02	16.02
2205 (S31803)			12.60	12.60	13.05	13.50	13.77	14.04	14.22	14.40						
3RE60 (S31500)			14.45	14.85	15.21	15.50	15.77	16.02	16.27	16.49						
70-30 CU-NI (C71500)				15.30	15.66	16.02	16.38									
90-10 & 80-20 CU-NI					17.10											
COPPER	15.48	16.20	16.92	17.28	17.46	17.64	17.82	18.18	18.36	18.54	18.72	18.90				
BRASS	16.38	16.74	17.28	17.46	18.00	18.36	18.90	19.26	19.62	20.16	20.52	20.88	21.42	21.78		
ALUMINUM BRONZE							16.20									
7 MO (S32900)				10.08	10.80	10.98	11.16	11.43	11.70	12.04	12.38	12.71	13.05	13.39	13.73	14.06
7 MO PLUS (S32950)						11.50	12.01	12.49	13.00	13.48	13.82	14.18	14.36	14.54	14.62	14.69
COPPER-SILICON							18.00									
ADMIRALTY								20.16								
ZIRCONIUM			5.76		6.30	6.66	7.02		7.38							
CR-NI-FE-MO-CU-CB (ALLOY 20CB)			14.94	14.94							16.92				17.28	
NI-CR-MO-CB (ALLOY 625) (N06625)	9.36	11.16	12.06	12.82	12.96	13.14	13.23	13.41	13.54	13.68	13.86	14.04	14.40	14.76	15.03	15.30
AL 29-4-2				9.36												
SEA-CURE				9.68	9.77	10.12	10.46	10.58	10.71							

REFERENCES:
ASME SECTION II, D, 1998 EDITION
R.A. MOEN (COLLECTED PAPERS, LETTERS & DATA)
HUNTINGTON ALLOYS, INC. BULLETIN #15M1-76T-42
ALLEGHENY LUDLUM STEEL CORP.
CABOT-STELLITE
TELEDYNE WAH CHANG ALBANY
BRIDGEPORT BRASS COMPANY
SABIN CROCKER, PIPING HANDBOOK, 4TH EDITION
INTERNATIONAL NICKEL CO.
ASTM SPECIAL TECHNICAL PUBLICATION # 181
CARPENTER TECHNOLOGY
TRENT TUBE
AIRCO, INC.
SANDVIK TUBE
NATIONAL BUREAU OF STANDARDS
D.G. FURMAN, JOURNAL OF METALS

TABLE D-12
THERMAL CONDUCTIVITY OF METALS

TEMP. DEG F / MATERIAL	BTU/HR. FT. DEG. F.															
	70	100	200	300	400	500	600	700	800	900	1000	1100	1200	1300	1400	1500
CARBON STEEL	30.0	29.9	29.2	28.4	27.6	26.6	25.6	24.6	23.5	22.5	21.4	20.2	19.0	17.6	16.2	15.6
C-1/2 MOLY STEEL	24.8	25.0	25.2	25.1	24.8	24.3	23.7	23.0	22.2	21.4	20.4	19.5	18.4	16.7	15.3	15.0
1 CR-1/2 MO & 1-1/4 CR-1/2 MO	21.3	21.5	21.9	22.0	21.9	21.7	21.3	20.8	20.2	19.7	19.1	18.5	17.7	16.5	15.0	14.8
2-1/4 CR-1 MO	20.9	21.0	21.3	21.5	21.5	21.4	21.1	20.7	20.2	19.7	19.1	18.5	18.0	17.2	15.6	15.3
5 CR-1/2 MO	16.9	17.3	18.1	18.7	19.1	19.2	19.2	19.0	18.7	18.4	18.0	17.6	17.1	16.6	16.0	15.8
7 CR-1/2 MO	14.1	14.4	15.3	16.0	16.5	16.9	17.1	17.2	17.3	17.2	17.1	16.8	16.6	16.2	15.6	15.5
9 CR-1 MO	12.8	13.1	14.0	14.7	15.2	15.6	15.9	16.0	16.1	16.1	16.1	16.0	15.8	15.6	15.2	15.0
3-1/2 NICKEL	22.9	23.2	23.8	24.1	23.9	23.4	22.9	22.3	21.6	20.9	20.1	19.2	18.2	16.9	15.5	15.3
12 CR & 13 CR	15.2	15.3	15.5	15.6	15.8	15.8	15.9	15.9	15.9	15.9	15.8	15.6	15.3	15.1	15.0	15.1
15 CR	14.2	14.2	14.4	14.5	14.6	14.7	14.7	14.8	14.8	14.8	14.8	14.8	14.8	14.8	14.8	14.8
17 CR	12.6	12.7	12.8	13.0	13.1	13.2	13.3	13.4	13.5	13.6	13.7	13.8	13.9	14.1	14.3	14.5
17-19 CR (TP 439)			14.0													
TP 304 STN STL	8.6	8.7	9.3	9.8	10.4	10.9	11.3	11.8	12.2	12.7	13.2	13.6	14.0	14.5	14.9	15.3
TP 316 & 317 STN STL	7.7	7.9	8.4	9.0	9.5	10.0	10.5	11.0	11.5	12.0	12.4	12.9	13.3	13.8	14.2	14.6
TP 321 & 347 STN STL	8.1	8.4	8.8	9.4	9.9	10.4	10.9	11.4	11.9	12.3	12.8	13.3	13.7	14.1	14.6	15.0
TP 310 STN STL	7.3	7.5	8.0	8.6	9.1	9.6	10.1	10.6	11.1	11.6	12.1	12.6	13.1	13.6	14.1	14.5
2205 (S31803)	8.0	8.5	9.0	9.5	10.0	10.5	11.0	11.5	12.0							
3RE60 (S31500)	8.4	8.5	9.0	9.4	9.8	10.2	10.6	11.0	11.3							
NICKEL 200			38.8	37.2	35.4	34.1	32.5	31.8	32.5	33.1	33.8					
NI-CU (N04400)	12.6	12.9	13.9	15.0	16.1	17.0	17.9	18.9	19.8	20.9	22.0					
NI-CR-FE (N06600)	8.6	8.7	9.1	9.6	10.1	10.6	11.1	11.6	12.1	12.6	13.2	13.8	14.3	14.9	15.5	16.0
NI-FE-CR (N08800)	6.7	6.8	7.4	8.0	8.6	9.1	9.6	10.1	10.6	11.1	11.6	12.1	12.7	13.2	13.8	14.5
NI-FE-CR-MO-CU (N08825)			7.1	7.6	8.1	8.6	9.1	9.6	10.0	10.4	10.9	11.4	11.8	12.4	12.9	13.6
NI-MO ALLOY B		6.1	6.4	6.7	7.0	7.4	7.7	8.2	8.7	9.3	10.0	10.7				
NI-MO-CR ALLOY C-276 (N10276)		5.9	6.4	7.0	7.5	8.1	8.7	9.2	9.8	10.4	11.0	11.5	12.1			
ALUMINUM ALLOY 3003	102.3	102.8	104.2	105.2	106.1											
ALUMINUM ALLOY 6061	96.1	96.9	99.0	100.6	101.9											
TITANIUM (GRADES 1,2,3 & 7)	12.7	12.5	12.0	11.7	11.5	11.3	11.2	11.2	11.2	11.3	11.4	11.6				
ADMIRALTY			70.0	75.0	79.0	84.0	89.0									
NAVAL BRASS			71.0	74.0	77.0	80.0	83.0									
COPPER			225.0	225.0	224.0	224.0	223.0									
90-10 CU-NI			30.0	31.0	34.0	37.0	42.0	47.0	49.0	51.0	53.0					
70-30 CU-NI (C71500)			18.0	19.0	21.0	23.0	25.0	27.0	30.0	33.0	37.0					
7 MO (S32900)		8.8	9.3	9.8	10.3	10.8	11.3									
7 MO PLUS (S32950)		8.6	9.4	10.2	11.1	11.8	12.7									
MUNTZ			71.0													
ZIRCONIUM			12.0													
CR-MO ALLOY XM-27			11.3													
CR-NI-FE-MO-CU-CB (ALLOY 20CB)			7.6													
NI-CR-MO-CB (ALLOY 625)	5.7	5.8	6.2	6.8	7.2	7.7	8.2	8.6	9.1	9.6	10.1	10.6	11.0	11.5	12.0	12.6
AL 29-4-2	8.8					11.0										
SEA-CURE	9.4	9.6	10.3	10.9	11.6	12.3	12.9	13.7								
AL-6XN (N08367)			7.9													

REFERENCES:
ASME SECTION II, D, 1998 EDITION
HUNTINGTON ALLOY, INC. BULLETIN #15M1-76T-42
A.I.M.E. TECH. PUBLICATIONS NOS 291, 360 & 648
ALLEGHENY LUDLUM STEEL CORP.
TELEDYNE WAH CHANG ALBANY
TRANS, A.S.S.T. VOL. 21, PAGES 1061-1078
BABCOX & WILCOX CO.
AMERICAN BRASS CO.
TRENT TUBE
AIRCO, INC.
CABOT-STELLITE
CARPENTER TECHNOLOGY
INTERNATIONAL NICKEL CO.
SANDVIK TUBE

TABLE D-12 M
THERMAL CONDUCTIVITY OF METALS

MATERIAL \ TEMP. DEG C	W/M DEG. C															
	21.1	37.8	93.3	148.9	204.4	260.0	315.6	371.1	426.7	482.2	537.8	593.3	648.9	704.4	760.0	815.6
CARBON STEEL	51.9	51.7	50.5	49.2	47.8	46.0	44.3	42.6	40.7	38.9	37.0	35.0	32.9	30.5	28.0	27.0
C-1/2 MOLY STEEL	42.9	43.3	43.6	43.4	42.9	42.1	41.0	39.8	38.4	37.0	35.3	33.7	31.8	28.9	26.5	26.0
1 CR-1/2 MO & 1-1/4 CR-1/2 MO	36.9	37.2	37.9	38.1	37.9	37.6	36.9	36.0	35.0	34.1	33.1	32.0	30.6	28.6	26.0	25.6
2-1/4 CR-1 MO	36.2	36.3	36.9	37.2	37.2	37.0	36.5	35.8	35.0	34.1	33.1	32.0	31.2	29.8	27.0	26.5
5 CR-1/2 MO	29.2	29.9	31.3	32.4	33.1	33.2	33.2	32.9	32.4	31.8	31.2	30.5	29.6	28.7	27.7	27.3
7 CR-1/2 MO	24.4	24.9	26.5	27.7	28.6	29.2	29.6	29.8	29.9	29.8	29.6	29.1	28.7	28.0	27.0	26.8
9 CR-1 MO	22.2	22.7	24.2	25.4	26.3	27.0	27.5	27.7	27.9	27.9	27.9	27.7	27.3	27.0	26.3	26.0
3-1/2 NICKEL	39.6	40.2	41.2	41.7	41.4	40.5	39.6	38.6	37.4	36.2	34.8	33.2	31.5	29.2	26.8	26.5
12 CR & 13 CR	26.3	26.5	26.8	27.0	27.3	27.3	27.5	27.5	27.5	27.5	27.3	27.0	26.5	26.1	26.0	26.1
15 CR	24.6	24.6	24.9	25.1	25.3	25.4	25.4	25.6	25.6	25.6	25.6	25.6	25.6	25.6	25.6	25.6
17 CR	21.8	22.0	22.2	22.5	22.7	22.8	23.0	23.2	23.4	23.5	23.7	23.9	24.1	24.4	24.7	25.1
17-19 CR (TP 439)			24.2													
TP 304 STN STL	14.9	15.1	16.1	17.0	18.0	18.9	19.6	20.4	21.1	22.0	22.8	23.5	24.2	25.1	25.8	26.5
TP 316 & 317 STN STL	13.3	13.7	14.5	15.6	16.4	17.3	18.2	19.0	19.9	20.6	21.5	22.3	23.0	23.9	24.6	25.3
TP 321 & 347 STN STL	14.0	14.5	15.2	16.3	17.1	18.0	18.9	19.7	20.6	21.3	22.2	23.0	23.7	24.4	25.3	26.0
TP 310 STN STL	12.6	13.0	13.8	14.9	15.7	16.6	17.5	18.4	19.2	20.1	20.9	21.8	22.7	23.5	24.4	25.1
2205 (S31803)	13.8	14.7	15.6	16.4	17.3	18.2	19.0	19.9	20.8							
3RE60 (S31500)	14.5	14.7	15.6	16.3	17.0	17.7	18.3	19.0	19.6							
NICKEL 200			67.2	64.4	61.3	59.0	56.2	55.0	56.2	57.3	58.5					
NI-CU (N04400)	21.8	22.3	24.1	26.0	27.9	29.4	31.0	32.7	34.3	36.2	38.1					
NI-CR-FE (N06600)	14.9	15.1	15.7	16.6	17.5	18.4	19.2	20.1	20.9	21.8	22.8	23.9	24.7	25.8	26.8	27.7
NI-FE-CR (N08800)	11.6	11.8	12.8	13.8	14.9	15.7	16.6	17.5	18.4	19.2	20.1	20.9	22.0	22.8	23.9	25.1
NI-FE-CR-MO-CU (N08825)			12.3	13.2	14.0	14.9	15.7	16.6	17.3	18.0	18.9	19.7	20.4	21.5	22.3	23.5
NI-MO ALLOY B		10.6	11.1	11.6	12.1	12.8	13.3	14.2	15.1	16.1	17.3	18.5				
NI-MO-CR ALLOY C-276 (N10276)		10.2	11.1	12.1	13.0	14.0	15.1	15.9	17.0	18.0	19.0	19.9	20.9			
ALUMINUM ALLOY 3003	177.1	177.9	180.3	182.1	183.6											
ALUMINUM ALLOY 6061	166.3	167.7	171.3	174.1	176.4											
TITANIUM (GRADES 1,2,3 & 7)	22.0	21.6	20.8	20.2	19.9	19.6	19.4	19.4	19.4	19.6	19.7	20.1				
ADMIRALTY			121.1	129.8	136.7	145.4	154.0									
NAVAL BRASS			122.9	128.1	133.3	138.5	143.6									
COPPER			389.4	389.4	387.7	387.7	385.9									
90-10 CU-NI			51.9	53.7	58.8	64.0	72.7	81.3	84.8	88.3	91.7					
70-30 CU-NI (C71500)			31.2	32.9	36.3	39.8	43.3	46.7	51.9	57.1	64.0					
7 MO (S32900)		15.2	16.1	17.0	17.8	18.7	19.6									
7 MO PLUS (S32950)		14.9	16.3	17.7	19.2	20.4	22.0									
MUNTZ			122.9													
ZIRCONIUM			20.8													
CR-MO ALLOY XM-27			19.6													
CR-NI-FE-MO-CU-CB (ALLOY 20CB)			13.2													
NI-CR-MO-CB (ALLOY 625)	9.9	10.0	10.7	11.8	12.5	13.3	14.2	14.9	15.7	16.6	17.5	18.3	19.0	19.9	20.8	21.8
AL 29-4-2	15.2					19.0										
SEA-CURE	16.3	16.6	17.8	18.9	20.1	21.3	22.3	23.7								
AL-6XN (N08367)			13.7													

REFERENCES:
ASME SECTION II, D, 1998 EDITION
HUNTINGTON ALLOY, INC. BULLETIN #15M1-76T-42
A.I.M.E. TECH. PUBLICATIONS NOS 291, 360 & 648
ALLEGHENY LUDLUM STEEL CORP.
TELEDYNE WAH CHANG ALBANY
TRANS, A.S.S.T. VOL. 21, PAGES 1061-1078
BABCOX & WILCOX CO.
AMERICAN BRASS CO.
TRENT TUBE
AIRCO, INC.
CABOT-STELLITE
CARPENTER TECHNOLOGY
INTERNATIONAL NICKEL CO.
SANDVIK TUBE

TABLE D-13

WEIGHTS OF CIRCULAR RINGS AND DISCS(1)

Example:

Required: Weight of a Ring 48" OD x 36 1/2" ID x 2 1/2" Thick

48" diameter disc 1" thick weighs	513.19 lbs.
36 1/2" diameter disc 1" thick weighs	296.74 lbs
Ring 48" x 36 1/2" x 1" weighs	216.45 lbs
Ring 48" x 36 1/2" x 2 1/2" weighs	541.13 lbs

Diameter	Weight per Inch of Thickness	Diameter	Weight per Inch of Thickness	Diameter	Weight per Inch of Thickness	Diameter	Weight per Inch of Thickness
Inches	Pounds	Inches	Pounds	Inches	Pounds	Inches	Pounds
0.000	0.00	4.000	3.56	8.000	14.26	12.000	32.07
0.125	0.00	4.125	3.79	8.125	14.70	12.125	32.75
0.250	0.01	4.250	4.02	8.250	15.16	12.250	33.42
0.375	0.03	4.375	4.26	8.375	15.62	12.375	34.11
0.500	0.06	4.500	4.51	8.500	16.09	12.500	34.80
0.625	0.09	4.625	4.76	8.625	16.57	12.625	35.50
0.750	0.13	4.750	5.03	8.750	17.05	12.750	36.21
0.875	0.17	4.875	5.29	8.875	17.54	12.875	36.92
1.000	0.22	5.000	5.57	9.000	18.04	13.000	37.64
1.125	0.28	5.125	5.85	9.125	18.55	13.125	38.37
1.250	0.35	5.250	6.14	9.250	19.06	13.250	39.10
1.375	0.42	5.375	6.44	9.375	19.58	13.375	39.85
1.500	0.50	5.500	6.74	9.500	20.10	13.500	40.59
1.625	0.59	5.625	7.05	9.625	20.63	13.625	41.35
1.750	0.68	5.750	7.36	9.750	21.17	13.750	42.11
1.875	0.78	5.875	7.69	9.875	21.72	13.875	42.88
2.000	0.89	6.000	8.02	10.000	22.27	14.000	43.66
2.125	1.01	6.125	8.36	10.125	22.83	14.125	44.44
2.250	1.13	6.250	8.70	10.250	23.40	14.250	45.23
2.375	1.26	6.375	9.05	10.375	23.98	14.375	46.03
2.500	1.39	6.500	9.41	10.500	24.56	14.500	46.83
2.625	1.53	6.625	9.78	10.625	25.15	14.625	47.64
2.750	1.68	6.750	10.15	10.750	25.74	14.750	48.46
2.875	1.84	6.875	10.53	10.875	26.34	14.875	49.28
3.000	2.00	7.000	10.91	11.000	26.95	15.000	50.12
3.125	2.18	7.125	11.31	11.125	27.57	15.125	50.96
3.250	2.35	7.250	11.71	11.250	28.19	15.250	51.80
3.375	2.54	7.375	12.11	11.375	28.82	15.375	52.65
3.500	2.73	7.500	12.53	11.500	29.46	15.500	53.51
3.625	2.93	7.625	12.95	11.625	30.10	15.625	54.38
3.750	3.13	7.750	13.38	11.750	30.75	15.750	55.25
3.875	3.34	7.875	13.81	11.875	31.41	15.875	56.13

(1) Weights are based on low carbon steel with a density of 0.2836 lb/inch ^{3}. For other metals, multiply by the following factors:

Aluminum	0.35	Muntz Metal	1.07
Titanium	0.58	Nickel-Chrome-Iron	1.07
A.I.S.I. 400 Series S/Steels	0.99	Admiralty	1.09
A.I.S.I. 300 Series S/Steels	1.02	Nickel	1.13
Aluminum Bronze	1.04	Nickel-Copper	1.12
Naval Rolled Brass	1.07	Copper & Cupro Nickels	1.14

TABLE D-13—(Continued)

WEIGHTS OF CIRCULAR RINGS AND DISCS

Diameter	Weight per Inch of Thickness	Diameter	Weight per Inch of Thickness	Diameter	Weight per Inch of Thickness	Diameter	Weight per Inch of Thickness
Inches	Pounds	Inches	Pounds	Inches	Pounds	Inches	Pounds
16.000	57.02	21.000	98.23	26.000	150.57	31.000	214.05
16.125	57.92	21.125	99.40	26.125	152.02	31.125	215.78
16.250	58.82	21.250	100.58	26.250	153.48	31.250	217.52
16.375	59.73	21.375	101.77	26.375	154.95	31.375	219.26
16.500	60.64	21.500	102.96	26.500	156.42	31.500	221.01
16.625	61.56	21.625	104.16	26.625	157.90	31.625	222.77
16.750	62.49	21.750	105.37	26.750	159.38	31.750	224.53
16.875	63.43	21.875	106.58	26.875	160.88	31.875	226.31
17.000	64.37	22.000	107.81	27.000	162.38	32.000	228.08
17.125	65.32	22.125	109.03	27.125	163.88	32.125	229.87
17.250	66.28	22.250	110.27	27.250	165.40	32.250	231.66
17.375	67.24	22.375	111.51	27.375	166.92	32.375	233.46
17.500	68.21	22.500	112.76	27.500	168.45	32.500	235.27
17.625	69.19	22.625	114.02	27.625	169.98	32.625	237.08
17.750	70.18	22.750	115.28	27.750	171.52	32.750	238.90
17.875	71.17	22.875	116.55	27.875	173.07	32.875	240.73
18.000	72.17	23.000	117.83	28.000	174.63	33.000	242.56
18.125	73.17	23.125	119.11	28.125	176.19	33.125	244.40
18.250	74.19	23.250	120.40	28.250	177.76	33.250	246.25
18.375	75.21	23.375	121.70	28.375	179.34	33.375	248.11
18.500	76.23	23.500	123.01	28.500	180.92	33.500	249.97
18.625	77.27	23.625	124.32	28.625	182.51	33.625	251.84
18.750	78.31	23.750	125.64	28.750	184.11	33.750	253.71
18.875	79.35	23.875	126.96	28.875	185.71	33.875	255.60
19.000	80.41	24.000	128.30	29.000	187.32	34.000	257.49
19.125	81.47	24.125	129.64	29.125	188.94	34.125	259.38
19.250	82.54	24.250	130.98	29.250	190.57	34.250	261.29
19.375	83.61	24.375	132.34	29.375	192.20	34.375	263.20
19.500	84.70	24.500	133.70	29.500	193.84	34.500	265.12
19.625	85.79	24.625	135.07	29.625	195.48	34.625	267.04
19.750	86.88	24.750	136.44	29.750	197.14	34.750	268.97
19.875	87.99	24.875	137.82	29.875	198.80	34.875	270.91
20.000	89.10	25.000	139.21	30.000	200.47	35.000	272.86
20.125	90.21	25.125	140.61	30.125	202.14	35.125	274.81
20.250	91.34	25.250	142.01	30.250	203.82	35.250	276.77
20.375	92.47	25.375	143.42	30.375	205.51	35.375	278.73
20.500	93.61	25.500	144.84	30.500	207.20	35.500	280.71
20.625	94.75	25.625	146.26	30.625	208.90	35.625	282.69
20.750	95.90	25.750	147.69	30.750	210.61	35.750	284.67
20.875	97.06	25.875	149.13	30.875	212.33	35.875	286.67

TABLE D-13—(Continued)

WEIGHTS OF CIRCULAR RINGS AND DISCS

Diameter	Weight per Inch of Thickness	Diameter	Weight per Inch of Thickness	Diameter	Weight per Inch of Thickness	Diameter	Weight per Inch of Thickness
Inches	Pounds	Inches	Pounds	Inches	Pounds	Inches	Pounds
36.000	288.67	41.000	374.42	46.000	471.32	51.000	579.34
36.125	290.68	41.125	376.71	46.125	473.88	51.125	582.19
36.250	292.69	41.250	379.00	46.250	476.45	51.250	585.04
36.375	294.71	41.375	381.30	46.375	479.03	51.375	587.90
36.500	296.74	41.500	383.61	46.500	481.62	51.500	590.76
36.625	298.78	41.625	385.93	46.625	484.21	51.625	593.63
36.750	300.82	41.750	388.25	46.750	486.81	51.750	596.51
36.875	302.87	41.875	390.58	46.875	489.42	51.875	599.39
37.000	304.93	42.000	392.91	47.000	492.03	52.000	602.29
37.125	306.99	42.125	395.25	47.125	494.65	52.125	605.19
37.250	309.06	42.250	397.60	47.250	497.28	52.250	608.09
37.375	311.14	42.375	399.96	47.375	499.91	52.375	611.00
37.500	313.23	42.500	402.32	47.500	502.55	52.500	613.92
37.625	315.32	42.625	404.69	47.625	505.20	52.625	616.85
37.750	317.42	42.750	407.07	47.750	507.86	52.750	619.79
37.875	319.52	42.875	409.45	47.875	510.52	52.875	622.73
38.000	321.64	43.000	411.84	48.000	513.19	53.000	625.67
38.125	323.75	43.125	414.24	48.125	515.87	53.125	628.63
38.250	325.88	43.250	416.65	48.250	518.55	53.250	631.59
38.375	328.01	43.375	419.06	48.375	521.24	53.375	634.56
38.500	330.15	43.500	421.48	48.500	523.94	53.500	637.53
38.625	332.30	43.625	423.90	48.625	526.64	53.625	640.52
38.750	334.46	43.750	426.34	48.750	529.35	53.750	643.51
38.875	336.62	43.875	428.78	48.875	532.07	53.875	646.50
39.000	338.79	44.000	431.22	49.000	534.80	54.000	649.51
39.125	340.96	44.125	433.68	49.125	537.53	54.125	652.52
39.250	343.14	44.250	436.14	49.250	540.27	54.250	655.53
39.375	345.33	44.375	438.60	49.375	543.01	54.375	658.56
39.500	347.53	44.500	441.08	49.500	545.77	54.500	661.59
39.625	349.73	44.625	443.56	49.625	548.53	54.625	664.63
39.750	351.94	44.750	446.05	49.750	551.29	54.750	667.67
39.875	354.16	44.875	448.54	49.875	554.07	54.875	670.73
40.000	356.38	45.000	451.05	50.000	556.85	55.000	673.79
40.125	358.61	45.125	453.56	50.125	559.64	55.125	676.85
40.250	360.85	45.250	456.07	50.250	562.43	55.250	679.92
40.375	363.10	45.375	458.60	50.375	565.23	55.375	683.00
40.500	365.35	45.500	461.13	50.500	568.04	55.500	686.09
40.625	367.61	45.625	463.66	50.625	570.86	55.625	689.19
40.750	369.87	45.750	466.21	50.750	573.68	55.750	692.29
40.875	372.14	45.875	468.76	50.875	576.51	55.875	695.39

TABLE D-13—(Continued)

WEIGHTS OF CIRCULAR RINGS AND DISCS

Diameter	Weight per Inch of Thickness	Diameter	Weight per Inch of Thickness	Diameter	Weight per Inch of Thickness	Diameter	Weight per Inch of Thickness
Inches	Pounds	Inches	Pounds	Inches	Pounds	Inches	Pounds
56.000	698.51	61.000	828.81	66.000	970.25	71.000	1122.83
56.125	701.63	61.125	832.21	66.125	973.93	71.125	1126.78
56.250	704.76	61.250	835.62	66.250	977.62	71.250	1130.75
56.375	707.90	61.375	839.03	66.375	981.31	71.375	1134.72
56.500	711.04	61.500	842.45	66.500	985.01	71.500	1138.70
56.625	714.19	61.625	845.88	66.625	988.71	71.625	1142.68
56.750	717.34	61.750	849.32	66.750	992.43	71.750	1146.67
56.875	720.51	61.875	852.76	66.875	996.15	71.875	1150.67
57.000	723.68	62.000	856.21	67.000	999.88	72.000	1154.68
57.125	726.86	62.125	859.66	67.125	1003.61	72.125	1158.69
57.250	730.04	62.250	863.13	67.250	1007.35	72.250	1162.71
57.375	733.23	62.375	866.60	67.375	1011.10	72.375	1166.74
57.500	736.43	62.500	870.07	67.500	1014.85	72.500	1170.77
57.625	739.64	62.625	873.56	67.625	1018.62	72.625	1174.81
57.750	742.85	62.750	877.05	67.750	1022.39	72.750	1178.86
57.875	746.07	62.875	880.55	67.875	1026.16	72.875	1182.91
58.000	749.29	63.000	884.05	68.000	1029.94	73.000	1186.98
58.125	752.53	63.125	887.56	68.125	1033.73	73.125	1191.04
58.250	755.77	63.250	891.08	68.250	1037.53	73.250	1195.12
58.375	759.01	63.375	894.61	68.375	1041.34	73.375	1199.20
58.500	762.27	63.500	898.14	68.500	1045.15	73.500	1203.29
58.625	765.53	63.625	901.68	68.625	1048.96	73.625	1207.39
58.750	768.80	63.750	905.22	68.750	1052.79	73.750	1211.49
58.875	772.07	63.875	908.78	68.875	1056.62	73.875	1215.60
59.000	775.35	64.000	912.34	69.000	1060.46	74.000	1219.72
59.125	778.64	64.125	915.91	69.125	1064.31	74.125	1223.84
59.250	781.94	64.250	919.48	69.250	1068.16	74.250	1227.97
59.375	785.24	64.375	923.06	69.375	1072.02	74.375	1232.11
59.500	788.55	64.500	926.65	69.500	1075.88	74.500	1236.26
59.625	791.87	64.625	930.24	69.625	1079.76	74.625	1240.41
59.750	795.19	64.750	933.85	69.750	1083.64	74.750	1244.57
59.875	798.52	64.875	937.46	69.875	1087.53	74.875	1248.73
60.000	801.86	65.000	941.07	70.000	1091.42	75.000	1252.91
60.125	805.20	65.125	944.69	70.125	1095.32	75.125	1257.09
60.250	808.56	65.250	948.32	70.250	1099.23	75.250	1261.27
60.375	811.91	65.375	951.96	70.375	1103.15	75.375	1265.47
60.500	815.28	65.500	955.61	70.500	1107.07	75.500	1269.67
60.625	818.65	65.625	959.26	70.625	1111.00	75.625	1273.88
60.750	822.03	65.750	962.91	70.750	1114.93	75.750	1278.09
60.875	825.42	65.875	966.58	70.875	1118.88	75.875	1282.31

TABLE D-13—(Continued)

WEIGHTS OF CIRCULAR RINGS AND DISCS

Diameter	Weight per Inch of Thickness	Diameter	Weight per Inch of Thickness	Diameter	Weight per Inch of Thickness	Diameter	Weight per Inch of Thickness
Inches	Pounds	Inches	Pounds	Inches	Pounds	Inches	Pounds
76.000	1286.54	81.000	1461.39	86.000	1647.38	91.000	1844.50
76.125	1290.78	81.125	1465.90	86.125	1652.17	91.125	1849.57
76.250	1295.02	81.250	1470.42	86.250	1656.97	91.250	1854.65
76.375	1299.27	81.375	1474.95	86.375	1661.78	91.375	1859.73
76.500	1303.52	81.500	1479.49	86.500	1666.59	91.500	1864.83
76.625	1307.79	81.625	1484.03	86.625	1671.41	91.625	1869.92
76.750	1312.06	81.750	1488.58	86.750	1676.24	91.750	1875.03
76.875	1316.33	81.875	1493.13	86.875	1681.07	91.875	1880.14
77.000	1320.62	82.000	1497.70	87.000	1685.91	92.000	1885.26
77.125	1324.91	82.125	1502.27	87.125	1690.76	92.125	1890.39
77.250	1329.21	82.250	1506.84	87.250	1695.61	92.250	1895.52
77.375	1333.51	82.375	1511.43	87.375	1700.48	92.375	1900.66
77.500	1337.83	82.500	1516.02	87.500	1705.34	92.500	1905.81
77.625	1342.14	82.625	1520.61	87.625	1710.22	92.625	1910.96
77.750	1346.47	82.750	1525.22	87.750	1715.10	92.750	1916.13
77.875	1350.80	82.875	1529.83	87.875	1719.99	92.875	1921.29
78.000	1355.14	83.000	1534.45	88.000	1724.89	93.000	1926.47
78.125	1359.49	83.125	1539.07	88.125	1729.79	93.125	1931.65
78.250	1363.84	83.250	1543.71	88.250	1734.70	93.250	1936.84
78.375	1368.21	83.375	1548.35	88.375	1739.62	93.375	1942.04
78.500	1372.57	83.500	1552.99	88.500	1744.55	93.500	1947.24
78.625	1376.95	83.625	1557.64	88.625	1749.48	93.625	1952.45
78.750	1381.33	83.750	1562.30	88.750	1754.42	93.750	1957.67
78.875	1385.72	83.875	1566.97	88.875	1759.36	93.875	1962.89
79.000	1390.11	84.000	1571.65	89.000	1764.32	94.000	1968.12
79.125	1394.52	84.125	1576.33	89.125	1769.27	94.125	1973.36
79.250	1398.93	84.250	1581.01	89.250	1774.24	94.250	1978.60
79.375	1403.34	84.375	1585.71	89.375	1779.21	94.375	1983.86
79.500	1407.77	84.500	1590.41	89.500	1784.19	94.500	1989.11
79.625	1412.20	84.625	1595.12	89.625	1789.18	94.625	1994.38
79.750	1416.63	84.750	1599.84	89.750	1794.18	94.750	1999.65
79.875	1421.08	84.875	1604.56	89.875	1799.18	94.875	2004.93
80.000	1425.53	85.000	1609.29	90.000	1804.19	95.000	2010.22
80.125	1429.99	85.125	1614.03	90.125	1809.20	95.125	2015.51
80.250	1434.45	85.250	1618.77	90.250	1814.22	95.250	2020.81
80.375	1438.92	85.375	1623.52	90.375	1819.25	95.375	2026.12
80.500	1443.40	85.500	1628.28	90.500	1824.29	95.500	2031.43
80.625	1447.89	85.625	1633.04	90.625	1829.33	95.625	2036.76
80.750	1452.38	85.750	1637.81	90.750	1834.38	95.750	2042.08
80.875	1456.88	85.875	1642.59	90.875	1839.44	95.875	2047.42

TABLE D-13—(Continued)

WEIGHTS OF CIRCULAR RINGS AND DISCS

Diameter	Weight per Inch of Thickness	Diameter	Weight per Inch of Thickness	Diameter	Weight per Inch of Thickness	Diameter	Weight per Inch of Thickness
Inches	Pounds	Inches	Pounds	Inches	Pounds	Inches	Pounds
96.000	2052.76	101.000	2272.16	106.000	2502.69	111.000	2744.37
96.125	2058.11	101.125	2277.79	106.125	2508.60	111.125	2750.55
96.250	2063.47	101.250	2283.42	106.250	2514.51	111.250	2756.74
96.375	2068.83	101.375	2289.06	106.375	2520.43	111.375	2762.94
96.500	2074.20	101.500	2294.71	106.500	2526.36	111.500	2769.15
96.625	2079.58	101.625	2300.37	106.625	2532.29	111.625	2775.36
96.750	2084.96	101.750	2306.03	106.750	2538.24	111.750	2781.58
96.875	2090.35	101.875	2311.70	106.875	2544.18	111.875	2787.80
97.000	2095.75	102.000	2317.38	107.000	2550.14	112.000	2794.04
97.125	2101.16	102.125	2323.06	107.125	2556.10	112.125	2800.28
97.250	2106.57	102.250	2328.75	107.250	2562.07	112.250	2806.52
97.375	2111.99	102.375	2334.45	107.375	2568.04	112.375	2812.78
97.500	2117.41	102.500	2340.15	107.500	2574.03	112.500	2819.04
97.625	2122.84	102.625	2345.86	107.625	2580.02	112.625	2825.31
97.750	2128.28	102.750	2351.58	107.750	2586.01	112.750	2831.58
97.875	2133.73	102.875	2357.31	107.875	2592.02	112.875	2837.86
98.000	2139.18	103.000	2363.04	108.000	2598.03	113.000	2844.15
98.125	2144.65	103.125	2368.78	108.125	2604.04	113.125	2850.45
98.250	2150.11	103.250	2374.52	108.250	2610.07	113.250	2856.75
98.375	2155.59	103.375	2380.28	108.375	2616.10	113.375	2863.06
98.500	2161.07	103.500	2386.04	108.500	2622.14	113.500	2869.38
98.625	2166.56	103.625	2391.80	108.625	2628.18	113.625	2875.70
98.750	2172.05	103.750	2397.58	108.750	2634.24	113.750	2882.03
98.875	2177.56	103.875	2403.36	108.875	2640.30	113.875	2888.37
99.000	2183.06	104.000	2409.14	109.000	2646.36	114.000	2894.72
99.125	2188.58	104.125	2414.94	109.125	2652.43	114.125	2901.07
99.250	2194.10	104.250	2420.74	109.250	2658.51	114.250	2907.43
99.375	2199.63	104.375	2426.55	109.375	2664.60	114.375	2913.79
99.500	2205.17	104.500	2432.36	109.500	2670.70	114.500	2920.16
99.625	2210.72	104.625	2438.19	109.625	2676.80	114.625	2926.54
99.750	2216.27	104.750	2444.02	109.750	2682.90	114.750	2932.93
99.875	2221.82	104.875	2449.85	109.875	2689.02	114.875	2939.32
100.000	2227.39	105.000	2455.70	110.000	2695.14	115.000	2945.72
100.125	2232.96	105.125	2461.55	110.125	2701.27	115.125	2952.13
100.250	2238.54	105.250	2467.40	110.250	2707.41	115.250	2958.54
100.375	2244.13	105.375	2473.27	110.375	2713.55	115.375	2964.96
100.500	2249.72	105.500	2479.14	110.500	2719.70	115.500	2971.39
100.625	2255.32	105.625	2485.02	110.625	2725.85	115.625	2977.83
100.750	2260.93	105.750	2490.90	110.750	2732.02	115.750	2984.27
100.875	2266.54	105.875	2496.80	110.875	2738.19	115.875	2990.72

TABLE D-14
CHORD LENGTHS & AREAS OF CIRCULAR SEGMENTS

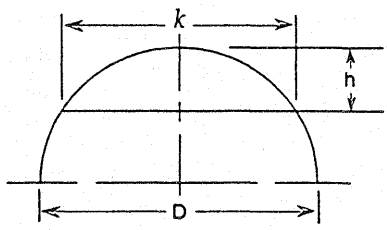

A = AREA
D = DIAMETER
h = HEIGHT
k = CHORD

$$A = C \times D^2$$

$$k = 2[h(D-h)]^{1/2}$$

h/D	C	h/D	C	h/D	C	h/D	C	h/D	C	h/D	C	h/D	C	h/D	C	h/D	C	h/D	C
		0.050	0.01468	0.100	0.04087	0.150	0.07387	0.200	0.11182	0.250	0.15355	0.300	0.19817	0.350	0.24498	0.400	0.29337	0.450	0.34278
0.001	0.00004	.051	.01512	.101	.04148	.151	.07459	.201	.11262	.251	.15441	.301	.19908	.351	.24593	.401	.29435	.451	.34378
.002	.00012	.052	.01556	.102	.04208	.152	.07531	.202	.11343	.252	.15528	.302	.20000	.352	.24689	.402	.29533	.452	.34477
.003	.00022	.053	.01601	.103	.04269	.153	.07603	.203	.11423	.253	.15615	.303	.20092	.353	.24784	.403	.29631	.453	.34577
.004	.00034	.054	.01646	.104	.04330	.154	.07675	.204	.11504	.254	.15702	.304	.20184	.354	.24880	.404	.29729	.454	.34676
.005	.00047	.055	.01691	.105	.04391	.155	.07747	.205	.11584	.255	.15789	.305	.20276	.355	.24976	.405	.29827	.455	.34776
.006	.00062	.056	.01737	.106	.04452	.156	.07819	.206	.11665	.256	.15876	.306	.20368	.356	.25071	.406	.29926	.456	.34876
.007	.00078	.057	.01783	.107	.04514	.157	.07892	.207	.11746	.257	.15964	.307	.20460	.357	.25167	.407	.30024	.457	.34975
.008	.00095	.058	.01830	.108	.04576	.158	.07965	.208	.11827	.258	.16051	.308	.20553	.358	.25263	.408	.30122	.458	.35075
.009	.00113	.059	.01877	.109	.04638	.159	.08038	.209	.11908	.259	.16139	.309	.20645	.359	.25359	.409	.30220	.459	.35175
.010	.00133	.060	.01924	.110	.04701	.160	.08111	.210	.11990	.260	.16226	.310	.20738	.360	.25455	.410	.30319	.460	.35274
.011	.00153	.061	.01972	.111	.04763	.161	.08185	.211	.12071	.261	.16314	.311	.20830	.361	.25551	.411	.30417	.461	.35374
.012	.00175	.062	.02020	.112	.04826	.162	.08258	.212	.12153	.262	.16402	.312	.20923	.362	.25647	.412	.30516	.462	.35474
.013	.00197	.063	.02068	.113	.04889	.163	.08332	.213	.12235	.263	.16490	.313	.21015	.363	.25743	.413	.30614	.463	.35573
.014	.00220	.064	.02117	.114	.04953	.164	.08406	.214	.12317	.264	.16578	.314	.21108	.364	.25839	.414	.30712	.464	.35673
.015	.00244	.065	.02166	.115	.05016	.165	.08480	.215	.12399	.265	.16666	.315	.21201	.365	.25936	.415	.30811	.465	.35773
.016	.00268	.066	.02215	.116	.05080	.166	.08554	.216	.12481	.266	.16755	.316	.21294	.366	.26032	.416	.30910	.466	.35873
.017	.00294	.067	.02265	.117	.05145	.167	.08629	.217	.12563	.267	.16843	.317	.21387	.367	.26128	.417	.31008	.467	.35972
.018	.00320	.068	.02315	.118	.05209	.168	.08704	.218	.12646	.268	.16932	.318	.21480	.368	.26225	.418	.31107	.468	.36072
.019	.00347	.069	.02366	.119	.05274	.169	.08779	.219	.12729	.269	.17020	.319	.21573	.369	.26321	.419	.31205	.469	.36172
.020	.00375	.070	.02417	.120	.05338	.170	.08854	.220	.12811	.270	.17109	.320	.21667	.370	.26418	.420	.31304	.470	.36272
.021	.00403	.071	.02468	.121	.05404	.171	.08929	.221	.12894	.271	.17198	.321	.21760	.371	.26514	.421	.31403	.471	.36372
.022	.00432	.072	.02520	.122	.05469	.172	.09004	.222	.12977	.272	.17287	.322	.21853	.372	.26611	.422	.31502	.472	.36471
.023	.00462	.073	.02571	.123	.05535	.173	.09080	.223	.13060	.273	.17376	.323	.21947	.373	.26708	.423	.31600	.473	.36571
.024	.00492	.074	.02624	.124	.05600	.174	.09155	.224	.13144	.274	.17465	.324	.22040	.374	.26805	.424	.31699	.474	.36671
.025	.00523	.075	.02676	.125	.05666	.175	.09231	.225	.13227	.275	.17554	.325	.22134	.375	.26901	.425	.31798	.475	.36771
.026	.00555	.076	.02729	.126	.05733	.176	.09307	.226	.13311	.276	.17644	.326	.22228	.376	.26998	.426	.31897	.476	.36871
.027	.00587	.077	.02782	.127	.05799	.177	.09384	.227	.13395	.277	.17733	.327	.22322	.377	.27095	.427	.31996	.477	.36971
.028	.00619	.078	.02836	.128	.05866	.178	.09460	.228	.13478	.278	.17823	.328	.22415	.378	.27192	.428	.32095	.478	.37071
.029	.00653	.079	.02889	.129	.05933	.179	.09537	.229	.13562	.279	.17912	.329	.22509	.379	.27289	.429	32194	.479	.37171
.030	.00687	.080	.02943	.130	.06000	.180	.09613	.230	.13646	.280	.18002	.330	.22603	.380	.27386	.430	.32293	.480	.37270
.031	.00721	.081	.02998	.131	.06067	.181	.09690	.231	.13731	.281	.18092	.331	.22697	.381	.27483	.431	.32392	.481	.37370
.032	.00756	.082	.03053	.132	.06135	.182	.09767	.232	.13815	.282	.18182	.332	.22792	.382	.27580	.432	.32491	.482	.37470
.033	.00791	.083	.03108	.133	.06203	.183	.09845	.233	.13900	.283	.18272	.333	.22886	.383	.27678	.433	.32590	.483	.37570
.034	.00827	.084	.03163	.134	.06271	.184	.09922	.234	.13984	.284	.18362	.334	.22980	.384	.27775	.434	.32689	.484	.37670
.035	.00864	.085	.03219	.135	.06339	.185	.10000	.235	.14069	.285	.18452	.335	.23074	.385	.27872	.435	.32788	.485	.37770
.036	.00901	.086	.03275	.136	.06407	.186	.10077	.236	.14154	.286	.18542	.336	.23169	.386	.27969	.436	.32887	.486	.37870
.037	.00938	.087	.03331	.137	.06476	.187	.10155	.237	.14239	.287	.18633	.337	.23263	.387	.28067	.437	.32987	.487	.37970
.038	.00976	.088	.03387	.138	.06545	.188	.10233	.238	.14324	.288	.18723	.338	.23358	.388	.28164	.438	.33086	.488	.38070
.039	.01015	.089	.03444	.139	.06614	.189	.10312	.239	.14409	.289	.18814	.339	.23453	.389	.28262	.439	.33185	.489	.38170
.040	.01054	.090	.03501	.140	.06683	.190	.10390	.240	.14494	.290	.18905	.340	.23547	.390	.28359	.440	.33284	.490	.38270
.041	.01093	.091	.03559	.141	.06753	.191	.10469	.241	.14580	.291	.18996	.341	.23642	.391	.28457	.441	.33384	.491	.38370
.042	.01133	.092	.03616	.142	.06822	.192	.10547	.242	.14666	.292	.19086	.342	.23737	.392	.28554	.442	.33483	.492	.38470
.043	.01173	.093	.03674	.143	.06892	.193	.10626	.243	.14751	.293	.19177	.343	.23832	.393	.28652	.443	.33582	.493	.38570
.044	.01214	.094	.03732	.144	.06963	.194	.10705	.244	.14837	.294	.19268	.344	.23927	.394	.28750	.444	.33682	.494	.38670
.045	.01255	.095	.03791	.145	.07033	.195	.10784	.245	.14923	.295	.19360	.345	.24022	.395	.28848	.445	.33781	.495	.38770
.046	.01297	.096	.03850	.146	.07103	.196	.10864	.246	.15009	.296	.19451	.346	.24117	.396	.28945	.446	.33880	.496	.38870
.047	.01339	.097	.03909	.147	.07174	.197	.10943	.247	.15095	.297	.19542	.347	.24212	.397	.29043	.447	.33980	.497	.38970
.048	.01382	.098	.03968	.148	.07245	.198	.11023	.248	.15182	.298	.19634	.348	.24307	.398	.29141	.448	.34079	.498	.39070
.049	.01425	.099	.04028	.149	.07316	.199	.11102	.249	.15268	.299	.19725	.349	.24403	.399	.29239	.449	.34179	.499	.39170
																		.500	.39270

TABLE D-15

CONVERSION FACTORS

LENGTH

MULTIPLY	BY	TO OBTAIN
Inches	2.540	Centimeters
Inches	25.40	Millimeters
Feet	30.48	Centimeters
Feet	0.3048	Meters
Yards	0.9144	Meters
Miles	1.6094	Kilometers

AREA

MULTIPLY	BY	TO OBTAIN
Square Inches	6.4516	Square Centimeters
Square Feet	929.034	Square Centimeters
Square Feet	0.0929034	Square Meters
Square Inches	0.00064516	Square Meters

VOLUME

MULTIPLY	BY	TO OBTAIN
Cubic Inches	16.387162	Cubic Centimeters
Cubic Feet	0.028316	Cubic Meters
Cubic Feet	28.316	Liters
Gallons (U. S. Liq.)	3.7853	Liters
Gallons (Imp.)	4.54509	Liters
Barrels (U. S.)	0.1589873	Cubic Meters
Gallons (U. S. Liq.)	0.003785	Cubic Meters

MASS

MULTIPLY	BY	TO OBTAIN
Ounces (AV.)	28.3495	Grams
Pounds (AV.)	453.592	Grams
Pounds (AV.)	0.453592	Kilograms

DENSITY

MULTIPLY	BY	TO OBTAIN
Pounds Per Cubic Inch	27.680	Grams Per Cubic Centimeter
Pounds Per Cubic Foot	16.01846	Kilograms Per Cubic Meter
Pounds Per Cubic Foot	16.01794	Grams Per Liter
Pounds Per Gallon (U. S. Liq.)	0.119826	Kilograms Per Liter

VELOCITY

MULTIPLY	BY	TO OBTAIN
Feet Per Second	0.30480	Meters Per Second
Feet Per Minute	0.00508	Meters Per Second

FORCE

MULTIPLY	BY	TO OBTAIN
Pounds-Force	0.004448	Kilonewtons

VISCOSITY

MULTIPLY	BY	TO OBTAIN
Pounds Per Foot-Hour	0.4133	Centipoises
Pounds Per Foot-Hour	0.0004133	Kilogram-Second Per Square Meter
Pounds Per Foot-Second	1488.16	Centipoises
Square Feet Per Second	92903.04	Centistokes
Pound-Second Per Square Foot	47900	Centipoises

TEMPERATURE

		TO OBTAIN
Degrees Fahrenheit	Subtract 32 and Divide by 1.8	Degrees Centigrade
Degrees Rankine	Divide by 1.8	Degrees Kelvin
Degrees Fahrenheit	Add 459.67 and Divide by 1.8	Degrees Kelvin

TABLE D-15–(Continued)

CONVERSION FACTORS

PRESSURE

MULTIPLY	BY	TO OBTAIN
Pounds Per Square Inch	0.070307	Kilograms Per Square Centimeter
Pounds Per Square Foot	4.8828	Kilograms Per Square Meter
Pounds Per Square Inch	6894.76	Newtons Per Square Meter
Pounds Per Square Inch	0.06894	Bars
Pounds Per Square Inch	6894.76	Pascals
Inches of Hg	0.03453	Kilograms Per Square Centimeter
Pounds Per Square Inch	6.8947	Kilopascals

FLOW RATE

MULTIPLY	BY	TO OBTAIN
Gallons Per Minute (U. S. Liq.)	0.00006309	Cubic Meters Per Second
Pounds Per Hour	0.0001260	Kilograms Per Second
Cubic Feet Per Minute	1.699011	Cubic Meters Per Hour
Pounds Per Minute	0.007559	Kilograms Per Second

SPECIFIC VOLUME

MULTIPLY	BY	TO OBTAIN
Cubic Feet Per Pound	0.062428	Cubic Meters Per Kilogram
Gallons Per Pound (U.S. Liq.)	8.3454	Liters Per Kilogram

ENERGY & POWER

MULTIPLY	BY	TO OBTAIN
BTU	1055.06	Joules
BTU	0.2520	Kilocalories
BTU	0.000252	Thermies
Foot Pound	1.3558	Joules
BTU Per Hour	0.29307	Watts

ENTROPY

MULTIPLY	BY	TO OBTAIN
BTU Per Pound-°F	4.1868	Joules Per Gram-° C

ENTHALPY

MULTIPLY	BY	TO OBTAIN
BTU Per Pound	2.326	Joules Per Gram

SPECIFIC HEAT

MULTIPLY	BY	TO OBTAIN
BTU Per Pound-°F	4.1868	Joules Per Gram-° C

HEAT TRANSFER

MULTIPLY	BY	TO OBTAIN
BTU Per Hour-Square Foot-°F	5.67826	Watts Per Square Meter-° C
BTU Per Square Foot-Hour	3.15459	Watts Per Square Meter
BTU Per Square Foot-Hour	2.71246	Kilocalories Per Square Meter-Hour
BTU Per Square Foot-Hour-°F	4.88243	Kilocalories Per Square Meter-Hour-° C

THERMAL CONDUCTIVITY

MULTIPLY	BY	TO OBTAIN
BTU Per Foot-Hour. °F	1.7307	Watts Per Meter-° C
BTU Per Square Foot-°F Per Inch	0.14422	Watts Per Meter-° C
BTU Per Square Foot-Hour °F Per Foot	1.488	Kilocalories Per Square Meter-Hour ° C Per Meter

FOULING RESISTANCE

MULTIPLY	BY	TO OBTAIN
Hour-Square Foot-°F Per BTU	176.1102	Square Meter-° C Per Kilowatt
Hour-Square Foot-°F Per BTU	0.2048	Square Meter- Hour ° C Per Kilocalorie

MASS VELOCITY

MULTIPLY	BY	TO OBTAIN
Pounds Per Hour-Square Foot	0.0013562	Kilograms Per Square Meter-Second

HEATING VALUE

MULTIPLY	BY	TO OBTAIN
BTU Per Cubic Foot	0.037259	Megajoules Per Cubic Meter

TABLE D-16

CONVERSION TABLES FOR WIRE AND SHEET METAL GAGES

Values in approximate decimals of an inch.

As a number of gages are in use for various shapes and metals, it is advisable to state the thickness in thousandths when specifying gage number.

Gage number	American (A.W.G.) or Brown and Sharpe (B. & S.) (for non-ferrous wire and sheet) !	U.S. Steel Wire (S.W.G.) or Washburn and Moen or Roebling or Am. Steel and Wire Co. [A. (Steel) W.G.] (for steel wire)	Birmingham (B.W.G.) (for steel wire)or Stubs Iron Wire (for iron or brass wire)+	U.S. Standard (for sheet and plate metal, wrought iron)	Standard Birmingham (B.G.) (for sheet and hoop metal)	Imperial Standard Wire Gage (S.W.G.) (British legal standard)	Gage number
0000000		0.4900		0.500	0.6666	0.500	0000000
000000		0.4615		0.469	0.6250	0.464	000000
00000		0.4305		0.438	0.5883	0.432	00000
0000	0.460	0.3938	0.454	0.406	0.5416	0.400	0000
000	0.410	0.3625	0.425	0.375	0.5000	0.372	000
00	0.365	0.3310	0.380	0.344	0.4452	0.348	00
0	0.325	0.3065	0.340	0.312	0.3964	0.324	0
1	0.289	0.2830	0.300	0.281	0.3532	0.300	1
2	0.258	0.2625	0.284	0.266	0.3147	0.276	2
3	0.229	0.2437	0.259	0.250	0.2804	0.252	3
4	0.204	0.2253	0.238	0.234	0.2500	0.232	4
5	0.182	0.2070	0.220	0.219	0.2225	0.212	5
6	0.162	0.1920	0.203	0.203	0.1981	0.192	6
7	0.144	0.1770	0.180	0.188	0.1764	0.176	7
8	0.128	0.1620	0.165	0.172	0.1570	0.160	8
9	0.114	0.1483	0.148	0.156	0.1398	0.144	9
10	0.102	0.1350	0.134	0.141	0.1250	0.128	10
11	0.091	0.1205	0.120	0.125	0.1113	0.116	11
12	0.081	0.1055	0.109	0.109	0.0991	0.104	12
13	0.072	0.0915	0.095	0.094	0.0882	0.092	13
14	0.064	0.0800	0.083	0.078	0.0785	0.080	14
15	0.057	0.0720	0.072	0.070	0.0699	0.072	15
16	0.051	0.0625	0.065	0.062	0.0625	0.064	16
17	0.045	0.0540	0.058	0.056	0.0556	0.056	17
18	0.040	0.0475	0.049	0.050	0.0495	0.048	18
19	0.036	0.0410	0.042	0.0438	0.0440	0.040	19
20	0.032	0.0348	0.035	0.0375	0.0392	0.036	20
21	0.0285	0.0317	0.032	0.0344	0.0349	0.032	21
22	0.0253	0.0286	0.028	0.0312	0.0313	0.028	22
23	0.0226	0.0258	0.025	0.0281	0.0278	0.024	23
24	0.0201	0.0230	0.022	0.0250	0.0248	0.022	24
25	0.0179	0.0204	0.020	0.0219	0.0220	0.020	25
26	0.0159	0.0181	0.018	0.0188	0.0196	0.018	26
27	0.0142	0.0173	0.016	0.0172	0.0175	0.0164	27
28	0.0126	0.0162	0.014	0.0156	0.0156	0.0148	28
29	0.0113	0.0150	0.013	0.0141	0.0139	0.0136	29
30	0.0100	0.0140	0.012	0.0125	0.0123	0.0124	30
31	0.0089	0.0132	0.010	0.0109	0.0110	0.0116	31
32	0.0080	0.0128	0.009	0.0102	0.0098	0.0108	32
33	0.0071	0.0118	0.008	0.0094	0.0087	0.0100	33
34	0.0063	0.0104	0.007	0.0086	0.0077	0.0092	34
35	0.0056	0.0095	0.005	0.0078	0.0069	0.0084	35
36	0.0050	0.0090	0.004	0.0070	0.0061	0.0076	36
37	0.0045	0.0085		0.0066	0.0054	0.0068	37
38	0.0040	0.0080		0.0062	0.0048	0.0060	38
39	0.0035	0.0075			0.0043	0.0052	39
40	0.0031	0.0070			0.0039	0.0048	40
41		0.0066			0.0034	0.0044	41
42		0.0062			0.0031	0.0040	42
43		0.0060			0.0027	0.0036	43
44		0.0058			0.0024	0.0032	44
45		0.0055			0.0022	0.0028	45
46		0.0052			0.0019	0.0024	46
47		0.0050			0.0017	0.0020	47
48		0.0048			0.0015	0.0016	48
49		0.0046			0.0014	0.0012	49
50		0.0044			0.0012	0.0010	50

METRIC WIRE GAGE is ten times the diameter in millimeters.

! Sometimes used for iron wire.

+ Sometimes used for copperplate and for plate 12 gage and heavier and for steel tubes.

RECOMMENDED GOOD PRACTICE
RGP SECTION

This section of the TEMA Standards provides the designer with additional information and guidance relative to the design of shell and tube heat exchangers not covered by the scope of the main sections of the Standards. The title of this section, "Recommended Good Practice", indicates that the information should be considered, but is not a requirement of the basic Standards.

When a paragraph in this section (RGP) is followed by an R, C, and/or B, this RGP paragraph is an extension or amplification of a like numbered paragraph in the RCB section of the main Standards. Similarly, other suffix designations following RGP indicate other applicable sections of the main Standards.

RGP-G-7.11 HORIZONTAL VESSEL SUPPORTS

RGP-G-7.111 LOADS

RGP-G-7.1111 LOADS DUE TO WEIGHT

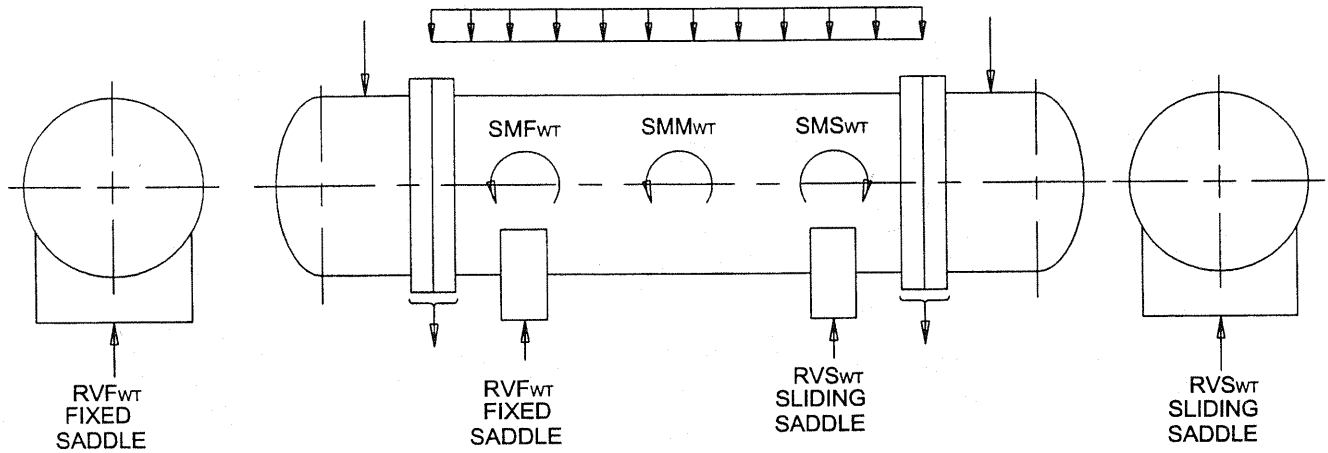

FIGURE RGP-G-7.1111

1. CALCULATE COMPONENT WEIGHTS AND WEIGHT OF CONTENTS (OPERATING AND TESTING).
2. CALCULATE VERTICAL SADDLE REACTIONS & LONGITUDINAL SHELL MOMENTS DUE TO WEIGHT FOR THE EMPTY, OPERATING & TEST CONDITIONS CONSIDERING ACTUAL COMPONENT WEIGHT AND LOCATION.
   - RVFWT = VERTICAL REACTION @ FIXED SADDLE DUE TO WEIGHT
   - RVSWT = VERTICAL REACTION @ SLIDING SADDLE DUE TO WEIGHT
   - SMFWT = LONGITUDINAL SHELL MOMENT @ FIXED SADDLE DUE TO WEIGHT
   - SMSWT = LONGITUDINAL SHELL MOMENT @ SLIDING SADDLE DUE TO WEIGHT
   - SMMWT = MAXIMUM LONGITUDINAL SHELL MOMENT BETWEEN SADDLES DUE TO WEIGHT

RGP-G-7.1112 EARTHQUAKE FORCES

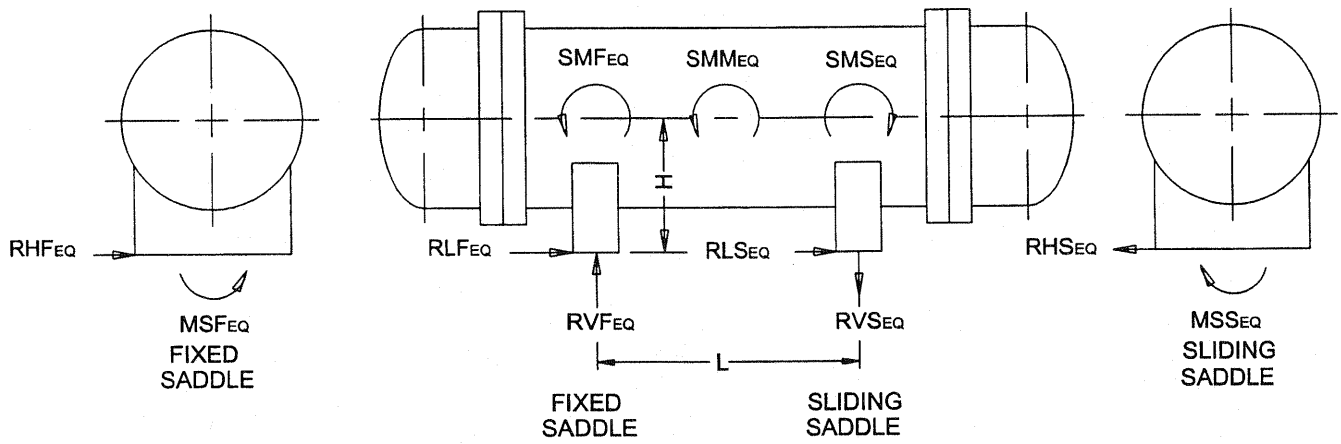

FIGURE RGP-G-7.1112

1. CALCULATE SEISMIC REACTIONS AND MOMENTS.

   - Cs = SEISMIC FACTOR
   - RLFEQ = TOTAL EXCH WT x Cs
   - RLSEQ = 0 (SLIDING SADDLE)
   - SMFEQ = SMFWT x Cs
   - SMSEQ = SMSWT x Cs
   - SMMEQ = SMMWT x Cs
   - RVFEQ = (RLFEQ x H) / L
   - RVSEQ = (RLFEQ x H) / L
   - RHFEQ = RVFWT x Cs
   - RHSEQ = RHFWT x Cs
   - MSFEQ = RHFEQ x H
   - MSSEQ = RHSEQ x H

RGP-G-7.1113 WIND LOADS

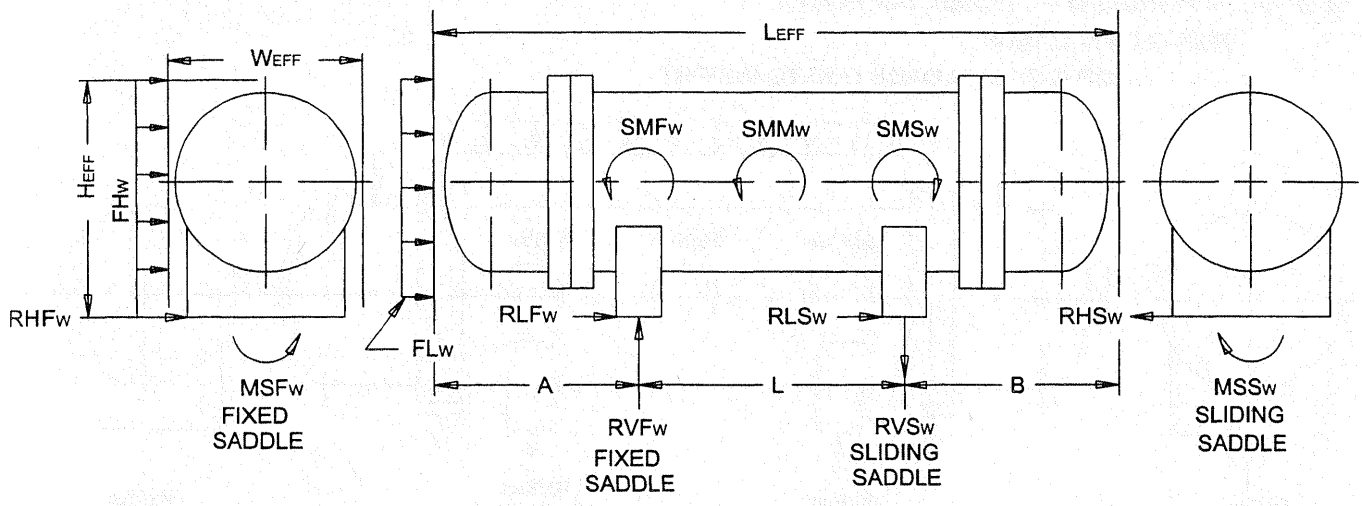

FIGURE RGP-G-7.1113

1. CALCULATE WIND LOADS (CALCULATE TOTAL WIND FORCE).
   - FLW = WEFF x HEFF x EFFECTIVE WIND LOAD (AS DETERMINED BY APPROPRIATE CODE)
   - FHW = HEFF x LEFF x EFFECTIVE WIND LOAD (AS DETERMINED BY APPROPRIATE CODE)
   - RLFW = FLW (MAY BE CONSIDERED NEGLIGIBLE FOR SMALL EXCHANGERS)
   - RLSW = 0 (SLIDING SADDLE)
   - SMFW = LONGITUDINAL SHELL MOMENT @ FIXED SADDLE DUE TO TRANSVERSE WIND (SHELL MOMENT DUE TO LONGITUDINAL WIND MAY BE CONSIDERED NEGLIGIBLE)
   - SMSW = LONGITUDINAL SHELL MOMENT @ SLIDING SADDLE DUE TO TRANSVERSE WIND (SHELL MOMENT DUE TO LONGITUDINAL WIND MAY BE CONSIDERED NEGLIGIBLE)
   - SMMW = MAXIMUM LONGITUDINAL SHELL MOMENT BETWEEN SADDLES DUE TO TRANSVERSE WIND (SHELL MOMENT DUE TO LONGITUDINAL WIND MAY BE CONSIDERED NEGLIGIBLE)

   RVFW = (RLFW x HEFF/2) / L
   RVSW = (RLFW x HEFF/2) / L
   RHFW = FHW x ((A + 0.5L) / LEFF)
   RHSW = FHW x ((B + 0.5L) / LEFF)
   MSFW = RHFW x HEFF/2
   MSSW = RHSW x HEFF/2

RGP-G-7.1114 THERMAL EXPANSION LOADS

LOADS CAUSED BY LONGITUDINAL GROWTH BETWEEN FIXED & SLIDING SADDLES

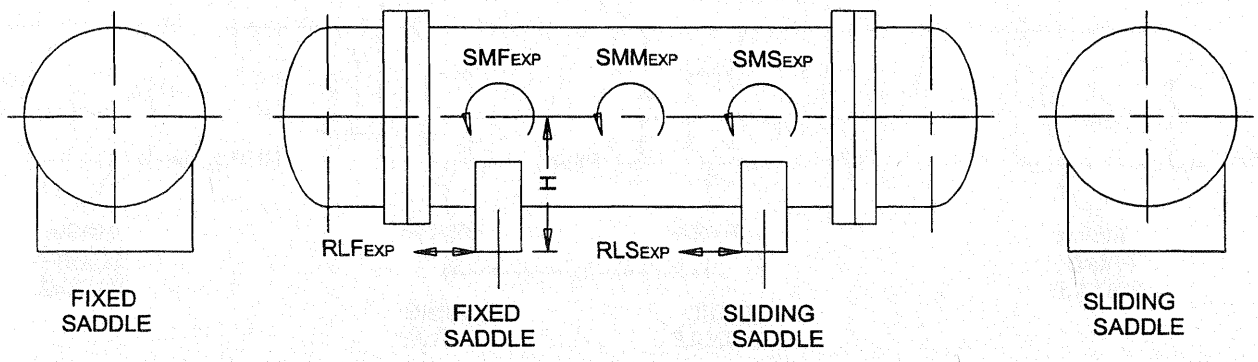

FIGURE RGP-G-7.1114

1. CALCULATE LOADS DUE TO THERMAL EXPANSION (WHERE μ = COEFFICIENT OF FRICTION BETWEEN FOUNDATION AND BASE PLATE AT SLIDING SADDLE).

   RLFEXP = RVSWT x μ
   RLSEXP = RVSWT x μ
   SMFEXP = RLFEXP x H
   SMSEXP = RLSEXP x H
   SMMEXP = RLSEXP x H
   μ FOR STEEL = 0.8
   μ FOR LUBRICATED PLATE = 0.1

RGP-G-7.1115 COMBINED FORCES

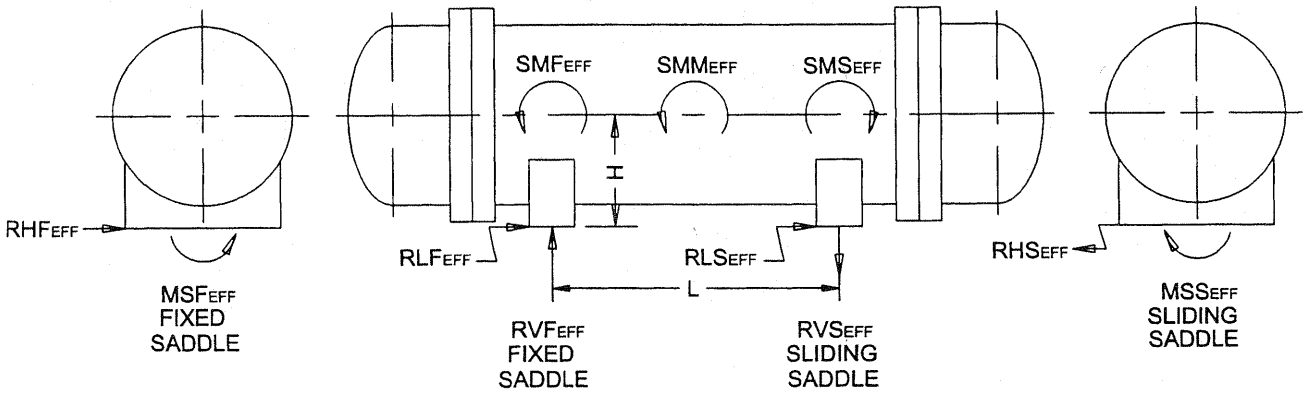

FIGURE RGP-G-7.1115

1. CALCULATE THE COMBINED SADDLE REACTIONS FOR THE FOLLOWING CASES OR AS APPROPRIATE IN DESIGN CRITERIA:
   - DEAD WEIGHT EMPTY
   - DEAD WEIGHT OPERATING
   - DEAD WEIGHT FLOODED
   - DEAD WEIGHT EMPTY + WIND
   - DEAD WEIGHT EMPTY + EARTHQUAKE
   - DEAD WEIGHT OPERATING + EARTHQUAKE
   - DEAD WEIGHT FLOODED + EARTHQUAKE
   - DEAD WEIGHT OPERATING + THERMAL EXPANSION
   - DEAD WEIGHT OPERATING + WIND OR ANY OTHER APPROPRIATE COMBINATION
   - DEAD WEIGHT FLOODED + WIND

2. CALCULATE RESULTANT SADDLE LOAD & SHELL MOMENT FOR WIND/EARTHQUAKE CASES:
   RVF_{EFF} = LARGER OF $(RVF_{WT}^2 + RHF_W^2)^{1/2}$ OR $(RVF_{WT}^2 + RHF_{EQ}^2)^{1/2}$
   RVS_{EFF} = LARGER OF $(RVS_{WT}^2 + RHS_W^2)^{1/2}$ OR $(RVS_{WT}^2 + RHS_{EQ}^2)^{1/2}$
   SMF_{EFF} = LARGER OF $(SMF_{WT}^2 + SMF_W^2)^{1/2}$ OR $(SMF_{WT}^2 + SMF_{EQ}^2)^{1/2}$
   SMS_{EFF} = LARGER OF $(SMS_{WT}^2 + SMS_W^2)^{1/2}$ OR $(SMS_{WT}^2 + SMS_{EQ}^2)^{1/2}$
   SMM_{EFF} = LARGER OF $(SMM_{WT}^2 + SMM_W^2)^{1/2}$ OR $(SMM_{WT}^2 + SMM_{EQ}^2)^{1/2}$

RGP-G-7.1116 EFFECTIVE REACTION LOAD SADDLE ANGLE

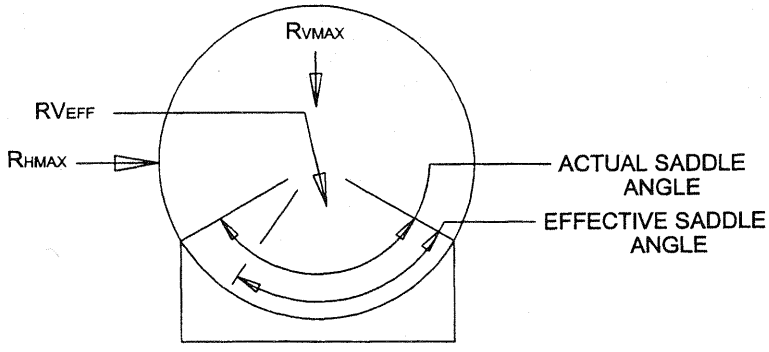

FIGURE RGP-G-7.1116

1. CALCULATE THE EFFECTIVE SADDLE ANGLE FOR EACH SADDLE FOR ALL WIND AND EARTHQUAKE CASES.
2. EFFECTIVE SADDLE ANGLE = ((ACTUAL SADDLE ANGLE DIVIDED BY 2) - ARCTAN(RH/RV)) x 2 (SEE FIGURE RGP-G-7.1116).

RGP-G-7.112 STRESSES

ONCE THE LOAD COMBINATIONS HAVE BEEN DETERMINED, THE STRESSES ON THE EXCHANGER CAN BE CALCULATED. THE METHOD OF CALCULATING STRESSES IS BASED ON "STRESSES IN LARGE HORIZONTAL CYLINDRICAL PRESSURE VESSELS ON TWO SADDLE SUPPORTS", PRESSURE VESSEL AND PIPING: DESIGN AND ANALYSIS, ASME, 1972, BY L.P. ZICK

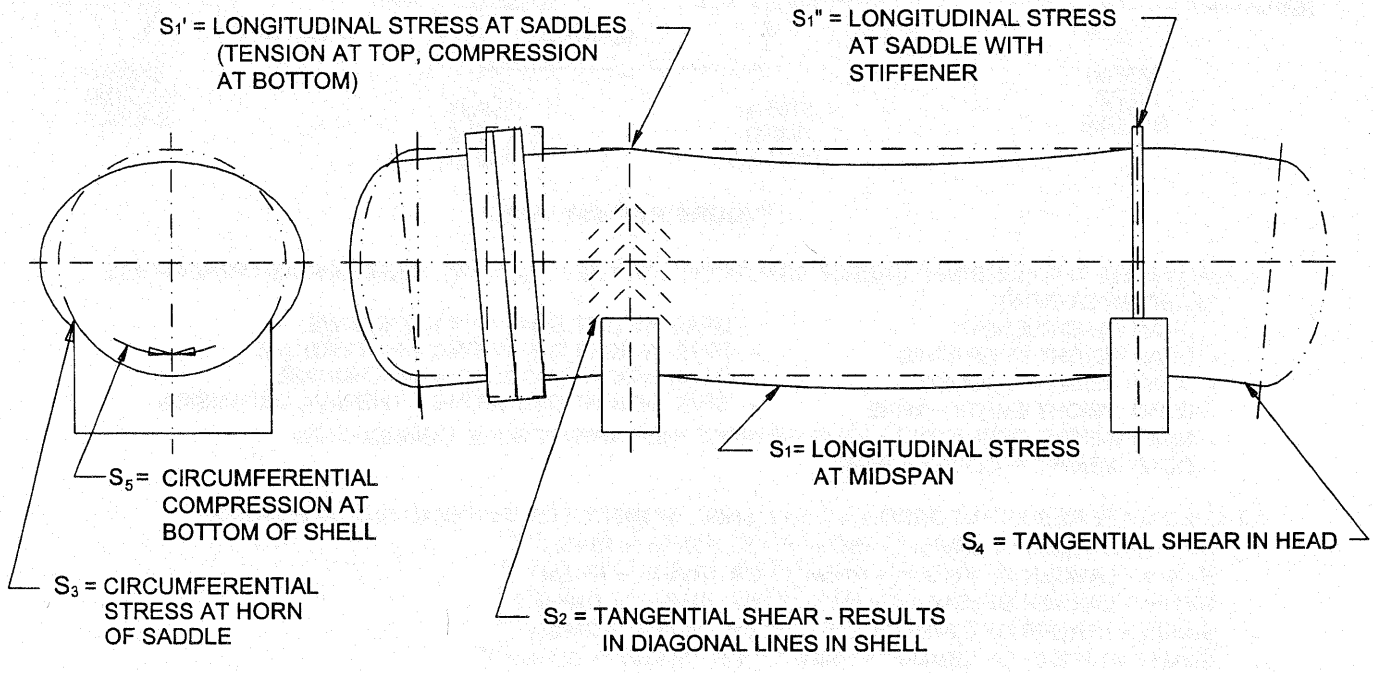

FIGURE RGP-G-7.112

RGP-G-7.1121 LONGITUDINAL STRESS AT MID SPAN (S_1)

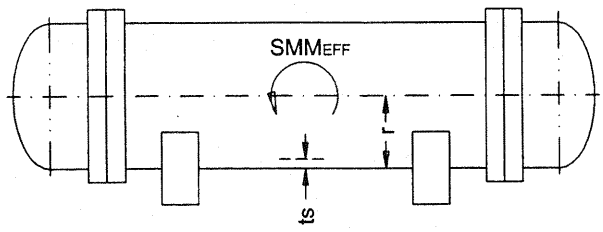

LONGITUDINAL STRESS

$$S_1 = \pm\left(\frac{SMM_{EFF}}{\pi r^2\, ts}\right), \frac{lb}{in^2}$$

LONGITUDINAL STRESS (METRIC)

$$S_1 = \pm\left(\frac{SMM_{EFF}}{\pi r^2\, ts}\right) \times 10^6, \text{ kPa}$$

WHERE

SMM_{EFF} = MAXIMUM EFFECTIVE SHELL MOMENT AT MID SPAN (SEE FIGURE RGP-G-7.1115) in-lb (mm-kN)

r = OUTSIDE SHELL RADIUS, inches (mm)

ts = SHELL THICKNESS, inches (mm)

RGP-G-7.1122 LONGITUDINAL STRESS AT THE SADDLE WITHOUT STIFFENERS (S_1')

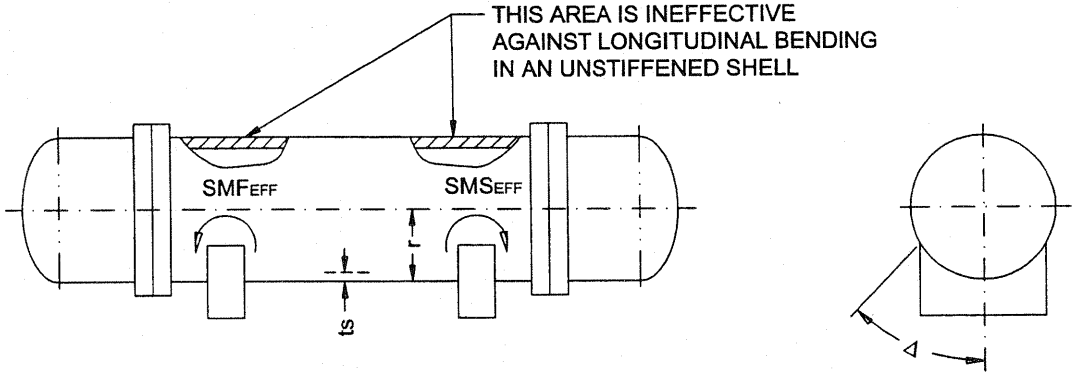

LONGITUDINAL STRESS

$$S_1' = \pm \frac{SMF_{EFF} \text{ or } SMS_{EFF}}{\pi r^2\, ts\left[\frac{\Delta + SIN\Delta COS\Delta - 2\frac{SIN^2\Delta}{\Delta}}{\pi\left(\frac{SIN^2\Delta}{\Delta} - COS\Delta\right)}\right]}, \frac{lb}{in^2}$$

LONGITUDINAL STRESS (METRIC)

$$S_1' = \pm \frac{SMF_{EFF} \text{ or } SMS_{EFF}}{\pi r^2\, ts\left[\frac{\Delta + SIN\Delta COS\Delta - 2\frac{SIN^2\Delta}{\Delta}}{\pi\left(\frac{SIN^2\Delta}{\Delta} - COS\Delta\right)}\right]} \times 10^6, \text{ kPa}$$

WHERE

SMF_{EFF}, SMS_{EFF} = MAXIMUM EFFECTIVE SHELL MOMENT AT FIXED OR SLIDING SADDLE (SEE FIGURE RGP-G-7.1115) in-lb, (mm-kN)

r = OUTSIDE SHELL RADIUS, inches (mm)

ts = SHELL THICKNESS, inches (mm)

Δ = ½ EFFECTIVE SADDLE ANGLE, radians

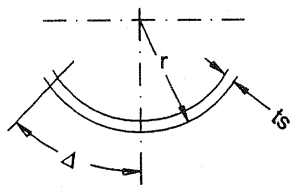

EFFECTIVE SECTION MODULUS OF ARC

RGP-G-7.1123 LONGITUDINAL STRESS AT THE SADDLE WITH STIFFENER RINGS OR END CLOSURES CLOSE ENOUGH TO SERVE AS STIFFENERS (S_1")

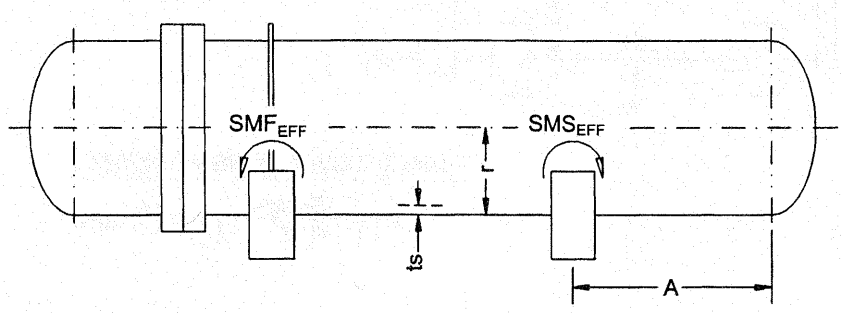

LONGITUDINAL STRESS

$$S_1" = \pm \left(\frac{SMF_{EFF} \text{ or } SMS_{EFF}}{\pi r^2 ts} \right) , \frac{lb}{in^2}$$

LONGITUDINAL STRESS (METRIC)

$$S_1" = \pm \left(\frac{SMF_{EFF} \text{ or } SMS_{EFF}}{\pi r^2 ts} \right) \times 10^6 , kPa$$

WHERE

SMF_{EFF} , SMS_{EFF} = MAXIMUM EFFECTIVE SHELL MOMENT AT FIXED OR SLIDING SADDLE (SEE FIGURE RGP-G-7.1115) in-lb, (mm-kN)

r = OUTSIDE SHELL RADIUS, inches (mm)

SECTION MODULUS = $\pi r^2 ts$, $inches^3$ (mm^3)

ts = SHELL THICKNESS, inches (mm)

IF THE SHELL IS STIFFENED IN THE PLANE OF THE SADDLE OR ADJACENT TO THE SADDLE OR THE SADDLE IS WITHIN $A \leq r/2$ OF THE END CLOSURE, THEN THE ENTIRE SECTION MODULUS OF THE CROSS SECTION IS EFFECTIVE.

ALLOWABLE STRESS LIMIT FOR S_1, S_1' & S_1"

TENSION - THE TENSILE STRESS + THE LONGITUDINAL STRESS DUE TO PRESSURE TO BE LESS THAN THE ALLOWABLE TENSION STRESS OF THE MATERIAL AT THE DESIGN TEMPERATURE TIMES THE JOINT EFFICIENCY OF THE GIRTH JOINT

COMPRESSION - THE COMPRESSIVE STRESS IS TO BE LESS THAN THE B FACTOR IN THE CODE FOR LONGITUDINAL COMPRESSION OF THE MATERIAL AT THE DESIGN TEMPERATURE.

RGP-G-7.1124 TANGENTIAL SHEAR STRESS IN PLANE OF SADDLE (S_2)

A) UNSTIFFENED SHELL

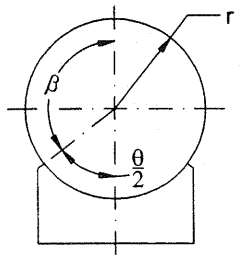

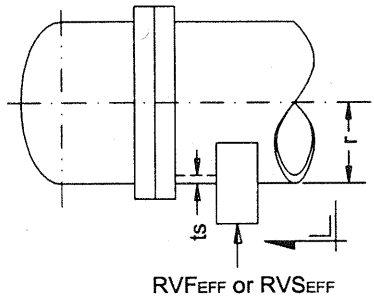

TANGENTIAL SHEAR STRESS

$$S_2 = \frac{K_2(RVF_{EFF} \text{ or } RVS_{EFF})}{rts} \quad , \frac{lb}{in^2}$$

TANGENTIAL SHEAR STRESS (METRIC)

$$S_2 = \frac{K_2(RVF_{EFF} \text{ or } RVS_{EFF})}{rts} \times 10^6, \text{ kPa}$$

MAXIMUM SHEAR AT $\theta = \alpha$

WHERE

RVF_{EFF} , RVS_{EFF} = MAXIMUM EFFECTIVE RESULTANT SADDLE LOAD AT FIXED OR SLIDING SADDLE (SEE FIGURE RGP-G-7.1115) in-lb, (mm-kN)

θ, degrees

$\beta = (180 - \frac{\theta}{2})$, degrees

$\alpha = \pi - \frac{\pi}{180}(\frac{\theta}{2} + \frac{\beta}{20})$, radians

r = OUTSIDE SHELL RADIUS, inches (mm)
ts = SHELL THICKNESS, inches (mm)

$$K_2 = \frac{SIN\alpha}{\pi - \alpha + SIN\alpha COS\alpha}$$

CONSTANT K_2 FOR VARIOUS VALUES OF θ

θ	K_2
120°	1.171
130°	1.022
140°	0.900
150°	0.799

B) SHELL STIFFENED BY RINGS IN PLANE OF SADDLE

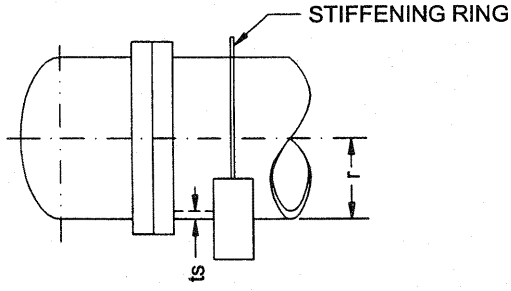

TANGENTIAL SHEAR STRESS

$$S_2 = \frac{K_2(RVF_{EFF} \text{ or } RVS_{EFF})}{rts} \quad , \frac{lb}{in^2}$$

TANGENTIAL SHEAR STRESS (METRIC)

$$S_2 = \frac{K_2(RVF_{EFF} \text{ or } RVS_{EFF})}{rts} \times 10^6, \text{ kPa}$$

WHERE

RVF_{EFF} , RVS_{EFF} = MAXIMUM EFFECTIVE RESULTANT SADDLE LOAD AT FIXED OR SLIDING SADDLE (SEE FIGURE RGP-G-7.1115) in-lb, (mm-kN)

r = OUTSIDE SHELL RADIUS, inches (mm)
ts = SHELL THICKNESS, inches (mm)

$K_2 = \frac{1}{\pi} = .318$

C) SHELL STIFFENED BY END CLOSURE (A ≤ r/2)

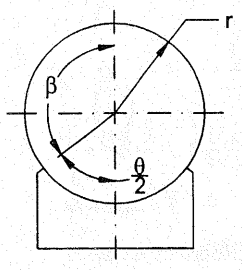

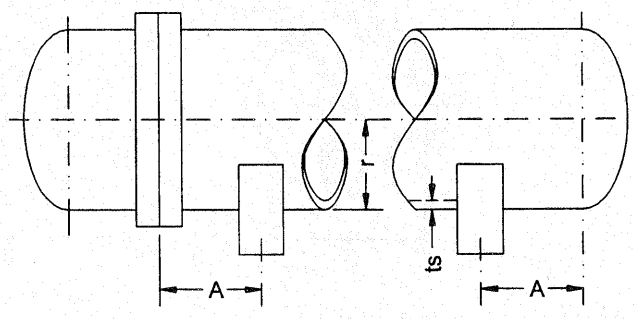

TANGENTIAL SHEAR STRESS

$$S_2 = \frac{K_2(RVF_{EFF} \text{ or } RVS_{EFF})}{rts}, \frac{lb}{in^2}$$

TANGENTIAL SHEAR STRESS (METRIC)

$$S_2 = \frac{K_2(RVF_{EFF} \text{ or } RVS_{EFF})}{rts} \times 10^6, kPa$$

MAXIMUM SHEAR AT $\theta = \alpha$

WHERE

RVF_{EFF} , RVS_{EFF} = MAXIMUM EFFECTIVE SHELL MOMENT AT FIXED OR SLIDING SADDLE (SEE FIGURE RGP-G-7.1115) in-lb, (mm-kN)

θ, degrees

$\beta = (180 - \frac{\theta}{2})$, degrees

$\alpha = \pi - \frac{\pi}{180}(\frac{\theta}{2} + \frac{\beta}{20})$, radians

r = OUTSIDE SHELL RADIUS, inches (mm)
ts = SHELL THICKNESS, inches (mm)

$$K_2 = \frac{SIN\alpha}{\pi}\left[\frac{\alpha - SIN\alpha COS\alpha}{\pi - \alpha + SIN\alpha COS\alpha}\right]$$

CONSTANT K_2 FOR VARIOUS VALUES OF θ

θ	K_2
120°	0.880
130°	0.722
140°	0.592
150°	0.485

ALLOWABLE STRESS LIMIT - THE MAXIMUM TANGENTIAL SHEAR STRESS FOR CASES A, B, & C IS TO BE LESS THAN 0.8 TIMES THE MAXIMUM ALLOWABLE STRESS IN TENSION OF THE SHELL MATERIAL AT THE DESIGN TEMPERATURE.

RGP-G-7.1125 CIRCUMFERENTIAL STRESS AT HORN OF SADDLES UNSTIFFENED (S_3)

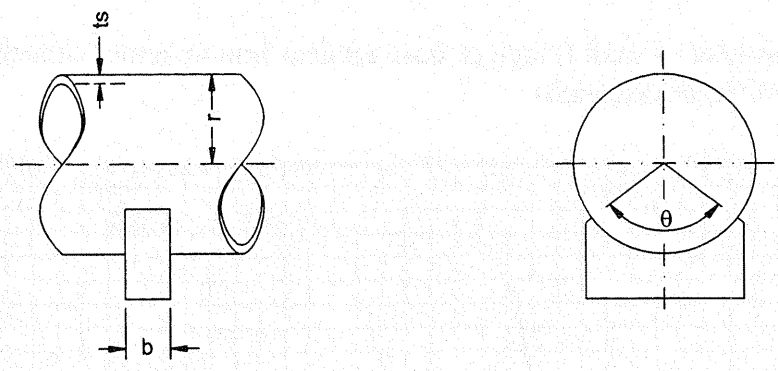

CIRCUMFERENTIAL STRESS AT HORN OF SADDLE

FOR $L_s \geq 8r$

$$S_3 = -\frac{(RVF_{EFF} \text{ OR } RVS_{EFF})}{4ts(b + 10ts)} - \frac{3K_3(RVF_{EFF} \text{ OR } RVS_{EFF})}{2ts^2}, \quad \frac{lb}{in^2}$$

OR

FOR $L_s < 8r$

$$S_3 = -\frac{(RVF_{EFF} \text{ OR } RVS_{EFF})}{4ts(b + 10ts)} - \frac{K_3 r(RVF_{EFF} \text{ OR } RVS_{EFF})}{Lsts^2}, \quad \frac{lb}{in^2}$$

CIRCUMFERENTIAL STRESS AT HORN OF SADDLE (METRIC)

FOR $L_s \geq 8r$

$$S_3 = \left[-\frac{(RVF_{EFF} \text{ OR } RVS_{EFF})}{4ts(b + 10ts)} - \frac{3K_3(RVF_{EFF} \text{ OR } RVS_{EFF})}{2ts^2}\right] \times 10^6, \text{ kPa}$$

OR

FOR $L_s < 8r$

$$S_3 = \left[-\frac{(RVF_{EFF} \text{ OR } RVS_{EFF})}{4ts(b + 10ts)} - \frac{K_3 r(RVF_{EFF} \text{ OR } RVS_{EFF})}{Lsts^2}\right] \times 10^6, \text{ kPa}$$

WHERE

RVF_{EFF}, RVS_{EFF} = MAXIMUM EFFECTIVE VERTICAL REACTION AT THE FIXED AND SLIDING SADDLE RESPECTIVELY, lb (kN)

r = OUTSIDE SHELL RADIUS, inches (mm)

b = WIDTH OF SADDLE, inches (mm)

L_s = SHELL LENGTH BETWEEN TUBESHEETS OR BETWEEN SHELL FLANGES OR BETWEEN SHELL FLANGE TO HEAD TANGENT LINE, inches (mm)

K_3 = CONSTANT FROM FIGURE RGP-G-7.1125

MAXIMUM ALLOWABLE STRESS LIMIT FOR S_3 = 1.25 TIMES ALLOWABLE STRESS IN TENSION FOR THE SHELL MATERIAL AT DESIGN TEMPERATURE.

Figure RGP-G-7.1125
VALUE OF CONSTANT K_3

A = Distance from tubesheet or shell flange or head tangent line to center of saddle, inches (mm)
r = Outside radius of shell, inches (mm)

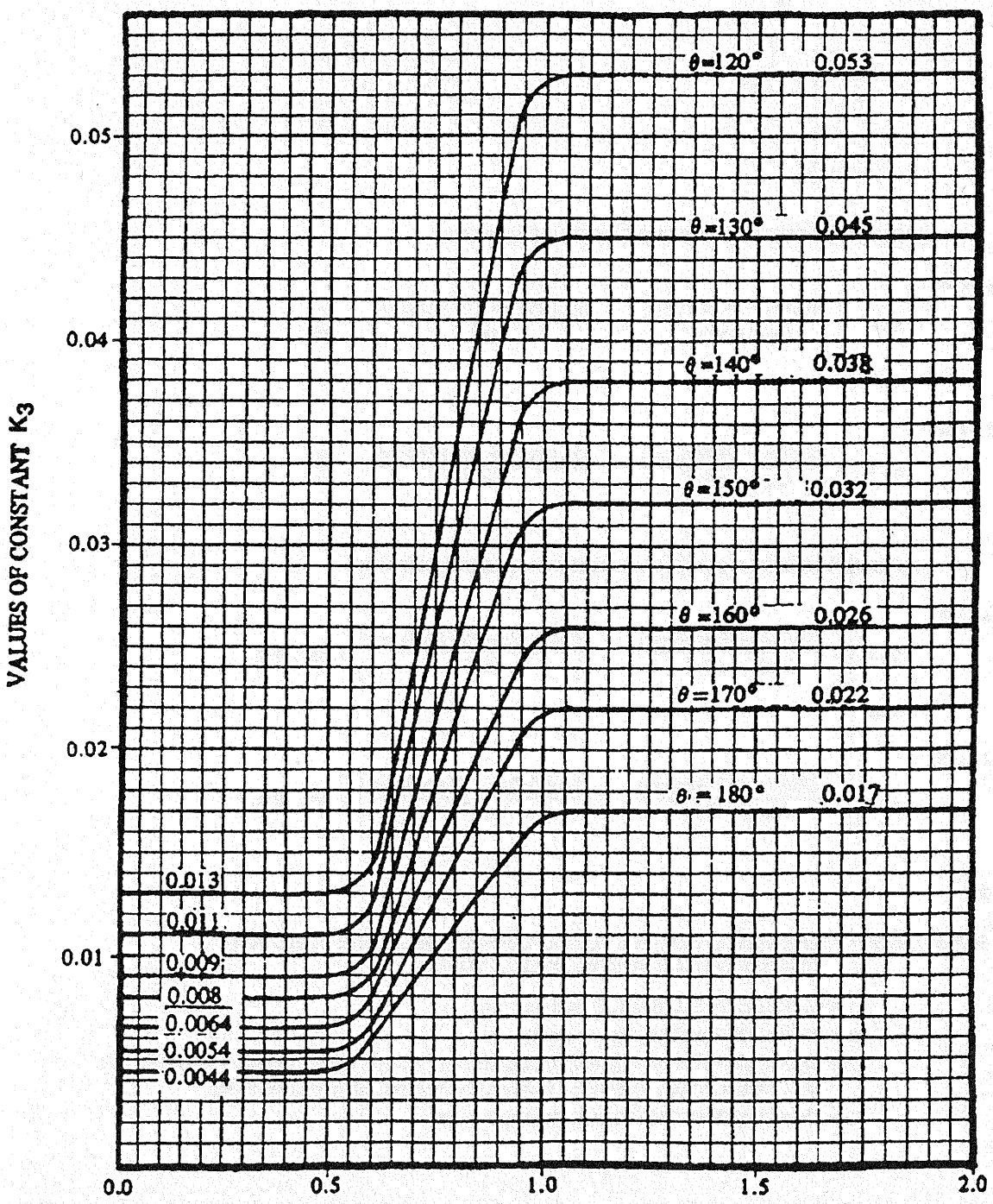

RGP-G-7.1126 STRESS IN HEAD USED AS STIFFENER (S_4)

If the head stiffness is used by locating the saddle close to the head, tangential shear stress should be added to the head pressure stress. The tangential shear has horizontal components which cause tension across the head.

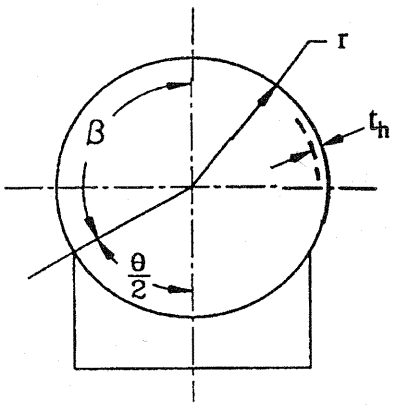

Central Angle $\alpha = \pi - \frac{\pi}{180}(\frac{\theta}{2} + \frac{\beta}{20})$, radians

$\beta = (180 - \theta/2)$, degrees

$$K_4 = \frac{3}{8}\left[\frac{\sin^2\alpha}{\pi - \alpha + \sin\alpha\cos\alpha}\right]$$

θ, degrees

Constant K_4 Value For Various Saddle Contact Angles, θ

θ	K_4
120°	0.401
130°	0.362
140°	0.327
150°	0.297

Stress In Head

$$S_4 = \frac{(RVF_{eff} \text{ or } RVS_{eff})\, K_4}{rt_h}, \frac{lb}{in^2}$$

Stress In Head (Metric)

$$S_4 = \left[\frac{(RVF_{eff} \text{ or } RVS_{eff})\, K_4}{rt_h}\right] \times 10^6, \text{ kPa}$$

Where t_h = thickness of head, inches (mm)

Allowable Stress Limit

The tangential shear is to be combined with the pressure stress in the head and should be less than 1.25 times the maximum allowable stress in tension of the head material at design temperature.

RGP-G-7.1127 RING COMPRESSION IN SHELL OVER SADDLE (S_5)

The sum of the tangential forces on both sides of the saddle at the shell band causes a ring compression stress in the shell band. A width of shell equal to 5ts each side of the saddle plus the saddle width resists this force. Wear plates of greater width than the saddle may be used to reduce the stress.

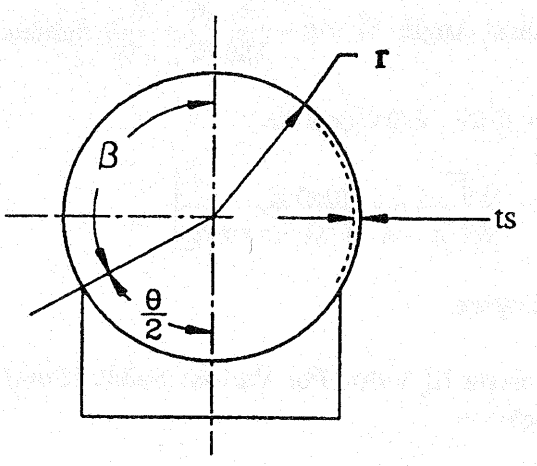

$\beta = (180 - \theta/2)$, degrees

Central Angle $\alpha = \pi - \frac{\pi}{180}(\frac{\theta}{2} + \frac{\beta}{20})$, radians

$$K_5 = \frac{1 + \cos\alpha}{\pi - \alpha + \sin\alpha\cos\alpha}$$

Constant K_5 Value For Various Saddle Contact Angles, θ

θ	K_5
120°	0.760
130°	0.726
140°	0.697
150°	0.673

Ring Compression Stress

$$S_5 = \frac{(RVF_{eff} \text{ or } RVS_{eff})\ K_5}{ts(b + 10ts)}, \frac{lb}{in^2}$$

Ring Compression Stress (Metric)

$$S_5 = \left[\frac{(RVF_{eff} \text{ or } RVS_{eff})\ K_5}{ts(b + 10ts)}\right] \times 10^6, kPa$$

Where b = saddle width, inches (mm)

Allowable Stress Limit

The maximum compressive stress should be less than 0.5 times the yield stress of the material at the design temperature. This should not be added to the pressure stress.

RGP-G-7.113 DESIGN OF SADDLE PARTS

DETERMINE MAXIMUM LOADS FROM APPLICABLE LOAD CONDITION
SEE FIGURE RGP-G-7.1115

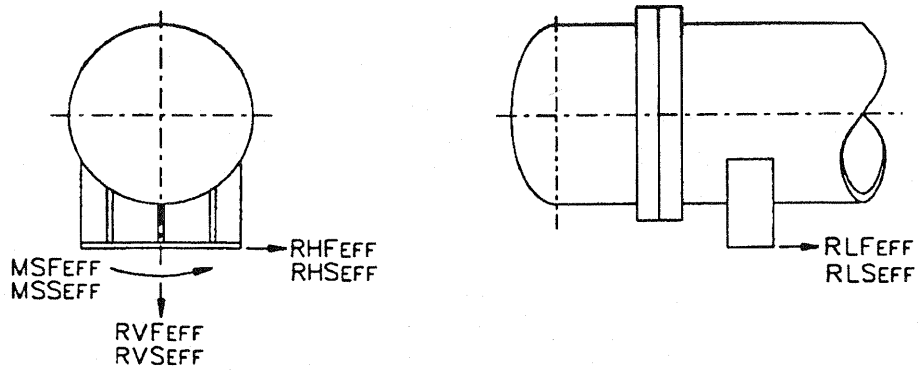

THERE ARE MANY TYPES OF BASE PLATE, WEB & GUSSET ARRANGEMENTS. THE FOLLOWING APPROACH IS OFFERED AS ONE OF MANY.

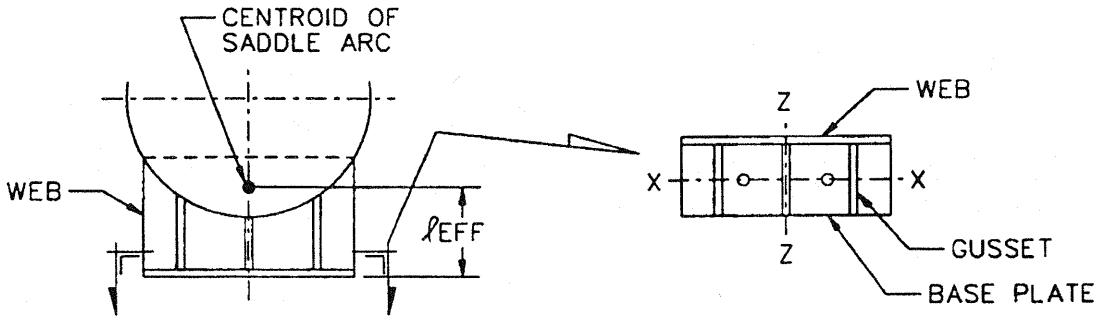

CALCULATE PROPERTIES OF SADDLE ABOUT X-X & Z-Z AXIS

A=AREA, in^2 (mm^2)
Ix-x, Iz-z=MOMENT OF **INERTIA** ABOUT x-x OR z-z, in^4 (mm^4)
Sx-x, Sz-z=SECTION MODULUS ABOUT x-x OR z-z, in^3 (mm^3)

CHECK WEB & GUSSETS AS COMBINED CROSS-SECTION FOR BENDING

BENDING STRESS ABOUT x-x AXIS

$$Sb = \frac{Mx\text{-}x}{Sx\text{-}x}, \frac{lb}{in^2}$$

BENDING STRESS ABOUT x-x AXIS (METRIC)

$$Sb = \frac{Mx\text{-}x}{Sx\text{-}x} \times 10^6, kPa$$

WHERE Mx-x = (RLFEFF OR RLSEFF) X ℓEFF, in-lb (mm-kN)
Sb < 90% YIELD STRESS

BENDING STRESS ABOUT z-z AXIS

$$Sb = \frac{Mz\text{-}z}{Sz\text{-}z}, \frac{lb}{in^2}$$

BENDING STRESS ABOUT z-z AXIS (METRIC)

$$Sb = \frac{Mz\text{-}z}{Sz\text{-}z} \times 10^6, kPa$$

WHERE Mz-z = (MSFEFF OR MSSEFF), in-lb (mm-kN)
Sb < 90% YIELD STRESS

CHECK WEB & GUSSETS AS COMBINED CROSS-SECTION
FOR COMPRESSION

STRESS IN COMPRESSION, $S_C = \frac{RVF_{EFF} \text{ or } RVS_{EFF}}{A}$, $\frac{lb}{in^2}$

STRESS IN COMPRESSION, $S_C = \frac{RVF_{EFF} \text{ or } RVS_{EFF}}{A} \times 10^6$, (kPa)

STRESS LIMIT = ALLOWABLE COMPRESSIVE STRESS

COMBINE STRESS FROM BENDING AND COMPRESSION

$$\frac{\text{ACTUAL BENDING STRESS}}{\text{ALLOWABLE BENDING STRESS}} + \frac{\text{ACTUAL COMPRESSIVE STRESS}}{\text{ALLOWABLE COMPRESSIVE STRESS}} \leq 1$$

RGP-G-7.12 VERTICAL VESSEL SUPPORTS

THE VESSEL LUGS DESCRIBED IN THIS PARAGRAPH INCORPORATE TOP PLATE, BASE PLATE AND TWO GUSSETS. OTHER CONFIGURATIONS AND METHODS OF CALCULATIONS ARE ACCEPTABLE.

APPLIED LOADS

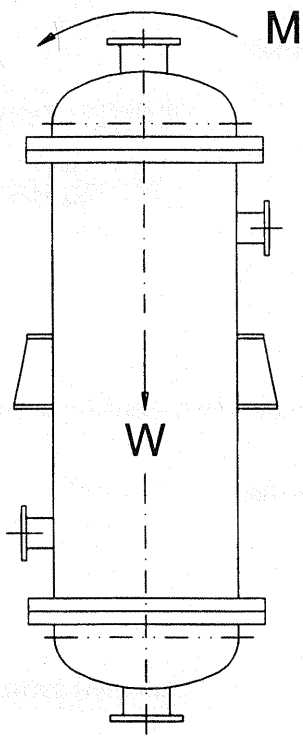

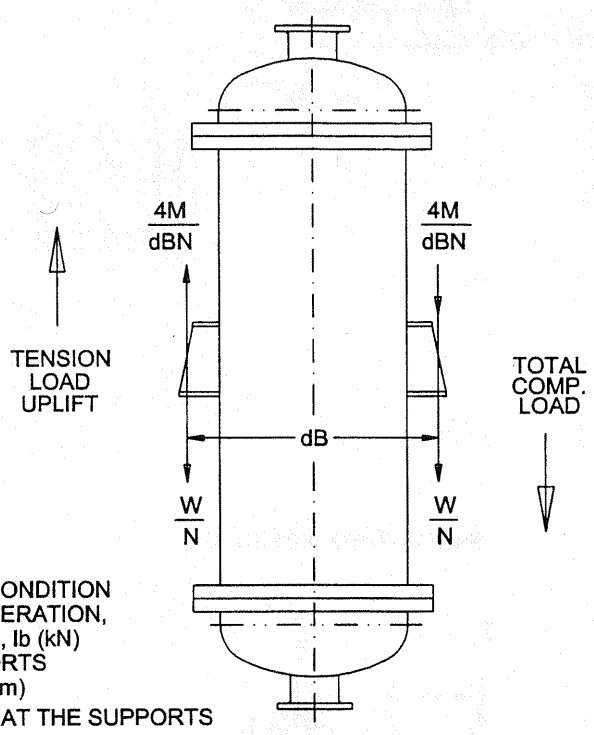

W = TOTAL DEAD WT. PER CONDITION ANALYZING (EMPTY, OPERATION, FULL OF WATER, ETC...), lb (kN)

N = NUMBER OF LUG SUPPORTS

dB = BOLT CIRCLE, inches (mm)

M = OVERTURNING MOMENT AT THE SUPPORTS DUE TO EXTERNAL LOADING, in-lb (mm-kN)

$$\text{MAX TENSION (UPLIFT)} = \frac{4M}{dBN} - \frac{W}{N}, \text{ lb (kN)}$$

$$\text{IF } W > \frac{4M}{dB} \text{ NO UPLIFT EXISTS}$$

$$\text{MAX COMPRESSION} = \frac{4M}{dBN} + \frac{W}{N}, \text{ lb (kN)}$$

RGP-G-7.121 DESIGN OF VESSEL SUPPPORT LUG

SUPPORT WITH TWO GUSSETS

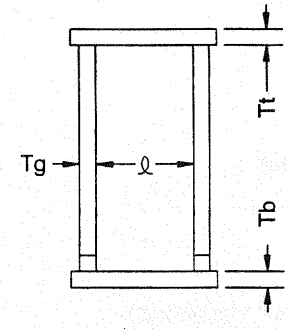

$$P = \frac{LL \times EC}{Ht}, \text{ lb (kN)}$$

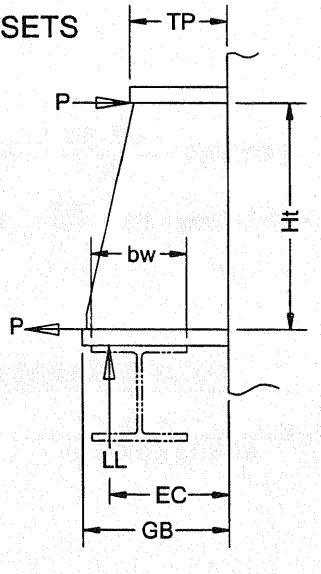

LL = LOAD PER LUG(TENSION OR COMPRESSION), lb (kN)

EC = LOCATION OF LOAD REACTION, inches (mm)

Ht = DISTANCE BETWEEN TOP PLATE AND BOTTOM PLATE, inches (mm)

Tb = THICKNESS OF BOTTOM PLATE, inches (mm)

Tt = THICKNESS OF TOP PLATE, inches (mm)

Tg = THICKNESS OF GUSSETS, inches (mm)

TP = TOP PLATE WIDTH, inches (mm)

GB = BOTTOM PLATE WIDTH, inches (mm)

bw = BEARING WIDTH ON BASE PLATE (USE 75% OF GB IF UNKNOWN), inches (mm)

RGP-G-7.122 BASE PLATE

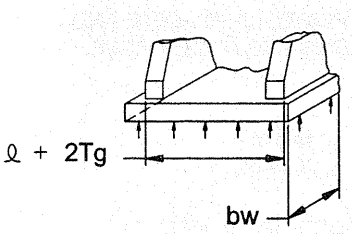

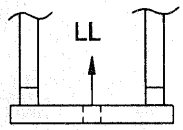

CONSIDER BASE PLATE AS A SIMPLY SUPPORTED BEAM SUBJECT TO A UNIFORMLY DISTRIBUTED LOAD ω, lb (kN)

$$M_B = \frac{\omega(\ell + Tg)^2}{8}, \text{ in-lb (mm-kN)}$$

WHERE

$$\omega = \frac{LL}{\ell + 2Tg}, \frac{lb}{in}\left(\frac{kN}{mm}\right)$$

FOR TENSION DUE TO UPLIFT, CONSIDER BASE PLATE AS SIMPLY SUPPORTED BEAM WITH A CONCENTRATED LOAD LL, lb (kN) AT ITS CENTER

$$M_T = \frac{LL(\ell + Tg)}{4}, \text{ in-lb (mm-kN)}$$

BENDING STRESS

$$Sb = \frac{6M^*}{(bw)(Tb)^2}, \frac{lb}{in^2}$$

BENDING STRESS (METRIC)

$$Sb = \frac{6M^*}{(bw)(Tb)^2} \times 10^6, \text{ kPa}$$

Sb < 90% YIELD STRESS

M^* = GREATER OF M_B OR M_T

RGP-G-7.123 TOP PLATE

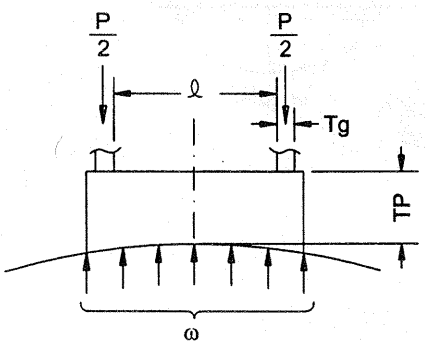

ASSUME SIMPLY SUPPORTED BEAM WITH UNIFORM LOAD

$$M = \frac{\omega(\ell + Tg)^2}{8}, \text{ in-lb (mm-kN)}$$

WHERE

$$\omega = \frac{P}{\ell + 2Tg}, \frac{lb}{in}\left(\frac{kN}{mm}\right)$$

BENDING STRESS

$$Sb = \frac{6M}{(TP)^2 x\,(Tt)}, \frac{lb}{in^2}$$

BENDING STRESS (METRIC)

$$Sb = \frac{6M}{(TP)^2 x\,(Tt)} \times 10^6, \text{ kPa}$$

Sb < 90% YIELD STRESS

RGP-G-7.124 GUSSETS

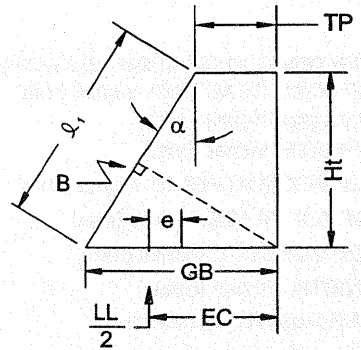

$$\alpha = \text{ARCTAN}\ \frac{GB - Tp}{Ht}, \text{ degrees}$$

$$e = \text{eccentricity} = EC - \frac{GB}{2}, \text{ inches (mm)}$$

MAX. COMPRESSIVE STRESS AT B

$$Sc = \frac{LL/2}{GB \times Tg \times (\cos\alpha)^2} \times \left(1 + \frac{6e}{GB}\right), \frac{lb}{in^2}$$

MAX. COMPRESSIVE STRESS AT B (METRIC)

$$Sc = \frac{LL/2}{GB \times Tg \times (\cos\alpha)^2} \times \left(1 + \frac{6e}{GB}\right) \times 10^6, \text{ kPa}$$

Sc < THE ALLOWABLE STRESS IN COMPRESSION (COLUMN BUCKLING PER AISC)

RGP-G-7.2 LIFTING LUGS (SOME ACCEPTABLE TYPES OF LIFTING LUGS)

RGP-G-7.21 VERTICAL UNITS

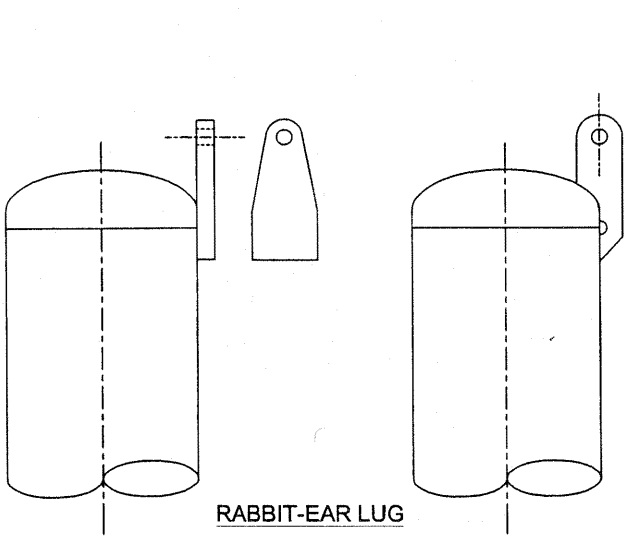

RABBIT-EAR LUG

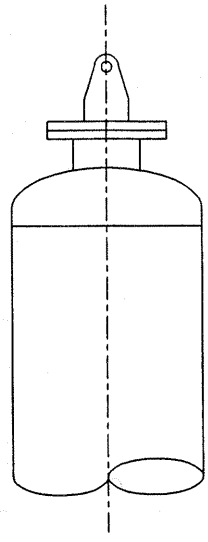

COVER LUG

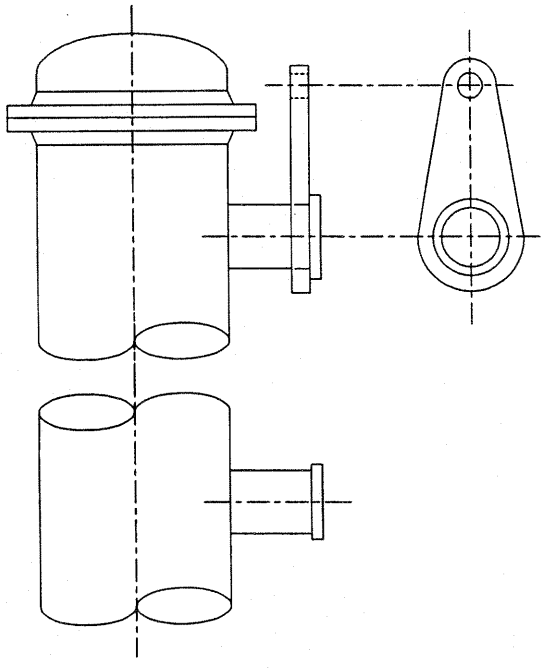

TRUNNION

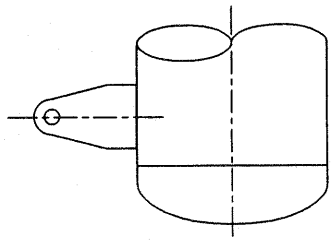

TAILING LUG

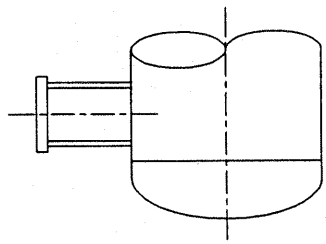

TAILING TRUNNION

TRUNNIONS SHOULD BE CHECKED FOR BENDING & SHEAR.
VESSEL REINFORCMENT SHOULD BE PROVIDED AS REQUIRED.

RGP-G-7.22 HORIZONTAL UNITS

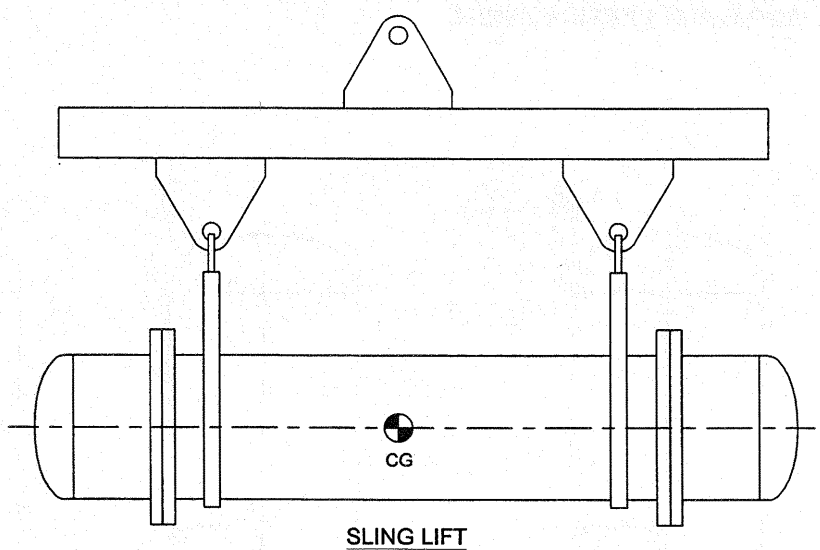

SLING LIFT
PREFERRED METHOD OF LIFTING IS SLINGING

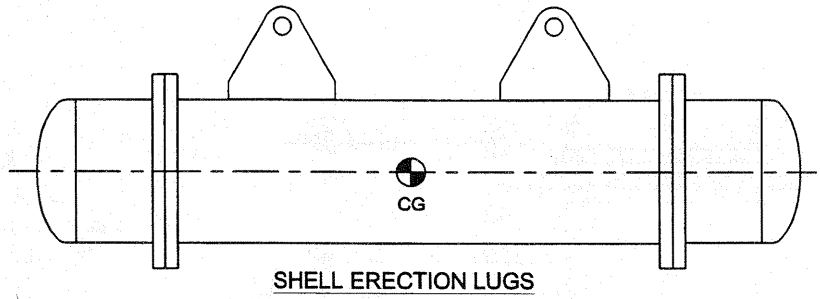

SHELL ERECTION LUGS
ONLY IF SPECIFIED BY CUSTOMER

RGP-G-7.23 TYPICAL COMPONENT LIFTING DEVICES

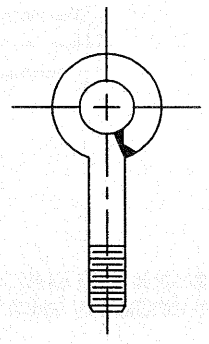

EYE BOLT

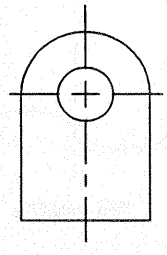

LIFTING LUG

RGP-G-7.24 LIFT PROCEDURE

1. ESTABLISH LIFT PROCEDURE.
   LIFT PROCEDURE IS ESTABLISHED BY CUSTOMER.
   THIS STEP MAY NOT BE NECESSARY FOR ROUTINE LIFTS.

EXAMPLE :

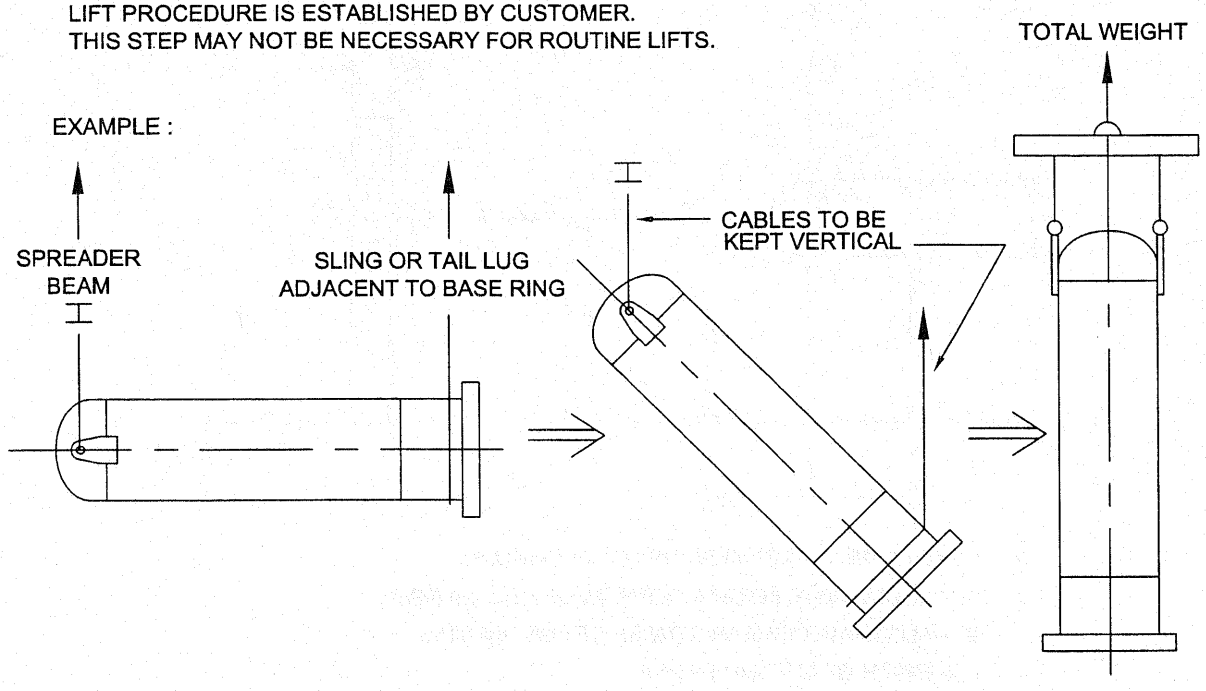

2. CALCULATE WEIGHT TO BE LIFTED.

3. APPLY IMPACT FACTOR.
   1.5 MINIMUM, UNLESS OTHERWISE SPECIFIED.

4. SELECT SHACKLE SIZE.
   NO IMPACT FACTOR IS APPLIED UNLESS CUSTOMER SPECIFIED. SHACKLE TABLES ARE AVAILABLE FROM SHACKLE MANUFACTURERS.

5. DETERMINE LOADS THAT APPLY (SEE ABOVE FIGURES).

6. SIZE LIFTING LUG.
THICKNESS OF LIFTING LUG IS CALCULATED BY USING THE GREATER OF SHEAR OR BENDING RESULTS AS FOLLOWS:

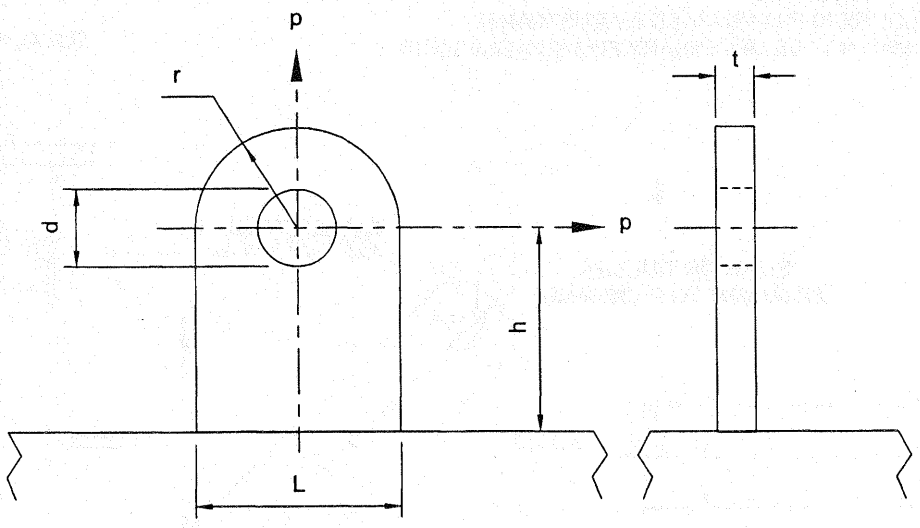

t = REQUIRED THICKNESS OF LUG, inches (mm)
Sb = ALLOWABLE BENDING STRESS OF LUG, psi (kPa)
S = ALLOWABLE SHEAR STRESS OF LUG, psi (kPa)
L = WIDTH OF LUG. inches (mm)
h = DISTANCE, CENTERLINE OF HOLE TO COMPONENT, inches (mm)
p = DESIGN LOAD / LUG INCLUDING IMPACT FACTOR, lb. (kN)
r = RADIUS OF LUG, inches (mm)
d = DIAMETER OF HOLE, inches (mm)

REQUIRED THICKNESS FOR SHEAR

$$t = \frac{p}{2(S)(r - d/2)} \text{ , inches}$$

REQUIRED THICKNESS FOR SHEAR (METRIC)

$$t = \frac{p}{2(S)(r - d/2)} \times 10^{6} \text{ , mm}$$

REQUIRED THICKNESS FOR BENDING

$$t = \frac{6\,p\,h}{Sb(L)^2} \text{ , inches}$$

REQUIRED THICKNESS FOR BENDING (METRIC)

$$t = \frac{6\,p\,h}{Sb(L)^2} \times 10^{6} \text{ , mm}$$

USE GREATER OF THICKNESS REQUIRED FOR BENDING OR SHEAR.

NOTE: COMPONENT SHOULD BE CHECKED AND/OR REINFORCED FOR LOCALLY IMPOSED STRESSES.

RGP-G-7.3 WIND AND SEISMIC DESIGN

For purposes of design, wind and seismic forces are assumed to be negligible unless the purchaser specifically details such forces in the inquiry.

When such requirements are specified by the purchaser, the designer should consider their effects on the various components of the heat exchanger. These forces should be evaluated in the design of the heat exchanger for the pressure containing components, the heat exchanger supports and the device used to attach the heat exchanger supports to the anchor points. Methods used for the design analysis are beyond the scope of these Standards; however, the designer can refer to the selected references listed below.

References:

(1) ASME Boiler and Pressure Vessel Code, Section III, "Nuclear Power Plant Components."

(2) "Earthquake Engineering", R. L. Weigel, Prentice Hall, Inc., 1970.

(3) "Fundamentals of Earthquake Engineering", Newark and Rosenbluth, Prentice Hall, Inc., 1971.

(4) Steel Construction Manual of the American Institute of Steel Construction, Inc., 8th Edition.

(5) TID-7024 (1963), "Nuclear Reactors and Earthquakes", U.S. Atomic Energy Commission Division of Technical Information.

(6) "Earthquake Engineering for Nuclear Reactor Facilities (JAB-101)", Blume, Sharp and Kost, John A. Blume and Associates, Engineers, San Francisco, California, 1971.

(7) "Process Equipment Design", Brownell and Young, Wiley and Sons, Inc., 1959.

RGP-RCB-2 PLUGGING TUBES IN TUBE BUNDLES

In U-tube heat exchangers, and other exchangers of special design, it may not be possible or feasible to remove and replace defective tubes. Under certain conditions as indicated below, the manufacturer may plug either a maximum of 1% of the tubes or 2 tubes without prior agreement.

Condition:

(1) For U-tube heat exchangers where the leaking tube(s) is more than 2 tubes away from the periphery of the bundle.

(2) For heat exchangers with limited access or manway openings in a welded-on channel where the tube is located such that it would be impossible to remove the tube through the access opening in the channel.

(3) For other heat exchanger designs which do not facilitate the tube removal in a reasonable manner.

(4) The method of tube plugging will be a matter of agreement between manufacturer and purchaser.

(5) The manufacturer maintains the original guarantees.

(6) "As-built" drawings indicating the location of the plugged tube(s) shall be furnished to the purchaser.

RGP-RCB-4.62 SHELL OR BUNDLE ENTRANCE AND EXIT AREAS

This paragraph provides methods for determining approximate shell and bundle entrance areas for common configurations as illustrated by Figures RGP-RCB-4.6211, 4.6212, 4.6221, 4.6222, 4.6231 and 4.6241.

Results are somewhat approximate due to the following considerations:

(1) Non-uniform location of tubes at the periphery of the bundle.
(2) The presence of untubed lanes through the bundle.
(3) The presence of tie rods, spacers, and/or bypass seal devices.

Full account for such concerns based on actual details will result in improved accuracy.

Special consideration must be given to other configurations. Some are listed below:

(1) Nozzle located near the bends of U-tube bundles.
(2) Nozzle which is attached in a semi or full tangential position to the shell.
(3) Perforated distribution devices.
(4) Impingement plates which are not flat or which are positioned with significant clearance off the bundle.
(5) Annular distributor belts.

RGP-RCB-4.621 AND 4.622 SHELL ENTRANCE OR EXIT AREA

The minimum shell entrance or exit area for Figures RGP-RCB-4.6211, 4.6212, 4.6221 and 4.6222 may be approximated as follows:

$$A_s = \pi D_n h + F_1\left(\frac{\pi}{4}D_n^2\right)\frac{(P_t - D_t)}{F_2 P_t}$$

where

A_s = Approximate shell entrance or exit area, inches ^{2} (mm ^{2}).

D_n = Nozzle inside diameter, inches (mm)

h = Average free height above tube bundle or impingement plate, inches (mm)

$h = 0.5(h_1 + h_2)$ for Figures RGP-RCB-4.6211, 4.6212 and 4.6222.

$h = 0.5(D_s - OTL)$ for Figure RGP-RCB-4.6221.

h_1 = Maximum free height (at nozzle centerline), inches (mm)

h_2 = Minimum free height (at nozzle edge), inches (mm)

$h_2 = h_1 - 0.5[D_s - (D_s^{\,2} - D_n^{\,2})^{0.5}]$

D_s = Shell inside diameter, inches (mm)

OTL = Outer tube limit diameter, inches (mm)

F_1 = Factor indicating presence of impingement plate

F_1 = 0 with impingement plate

F_1 = 1 without impingement plate

P_t = Tube center to center pitch, inches (mm)

D_t = Tube outside diameter, inches (mm)

F_2 = Factor indicating tube pitch type and orientation with respect to fluid flow direction

F_2 = 1.0 for 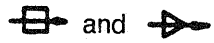 and

F_2 = 0.866 for 

F_2 = 0.707 for 

RGP-RCB-4.623 AND 4.624 BUNDLE ENTRANCE OR EXIT AREA

The minimum bundle entrance or exit area for Figures RGP-RCB-4.6231 and 4.6241 may be approximated as follows:

$$A_b = B_s(D_s - OTL) + (B_s K - A_p)\frac{P_t - D_t}{F_2 P_t} + A_t$$

where

A_b = Approximate bundle entrance or exit area, inches^2 (mm^2).

B_s = Baffle spacing at entrance or exit, inches (mm)

K = Effective chord distance across bundle, inches (mm)

$K = D_n$ for Figure RGP-RCB-4.6231

A_p = Area of impingement plate, inches^2 (mm^2)

$A_p = 0$ for no impingement plate

$A_p = \frac{\pi I_p^{\,2}}{4}$ for round impingement plate

$A_p = I_p^{\,2}$ for square impingement plate

I_p = Impingement plate diameter or edge length, inches (mm)

A_t = Unrestricted longitudinal flow area, inches^2 (mm^2)

The formulae below assume unrestricted longitudinal flow.

$A_l = 0$ for baffle cut normal to nozzle axis

$A_l = 0.5ab$ for Figure RGP-RCB-4.6231 with baffle cut parallel with nozzle axis

$A_l = 0.5(D_s - OTL)c$ for Figure RGP-RCB-4.6241 with baffle cut parallel with nozzle axis

a = Dimension from Figure RGP-RCB-4.6231, inches (mm)

b = Dimension from Figure RGP-RCB-4.6231, inches (mm)

c = Dimension from Figure RGP-RCB-4.6241, inches (mm)

RGP-RCB-4.625 ROD TYPE IMPINGEMENT PROTECTION

Rod type impingement protection shall utilize a minimum of two rows of rods arranged such that maximum bundle entrance area is provided without permitting direct impingement on any tube.

Shell entrance area may be approximated per Paragraph RGP-RCB-4.622, Figure RGP-RCB-4.6221.

Bundle entrance area may be approximated per Paragraph RGP-RCB-4.624, Figure RGP-RCB-4.6241.

FIGURES RGP-RCB-4.6211, 4.6212, 4.6221 AND 4.6222

SHELL ENTRANCE OR EXIT AREA

FIGURE RGP-RCB-4.6211
IMPINGEMENT PLATE – FULL LAYOUT

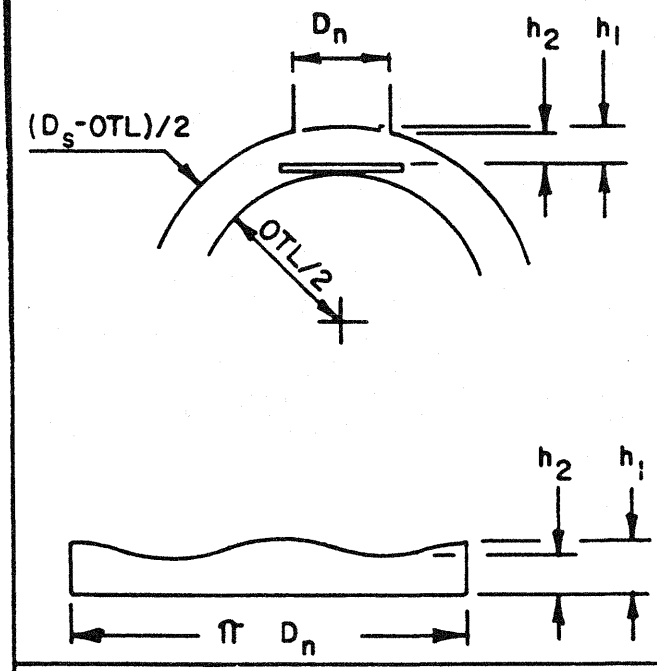

FIGURE RGP-RCB-4.6212
IMPINGEMENT PLATE – PARTIAL LAYOUT

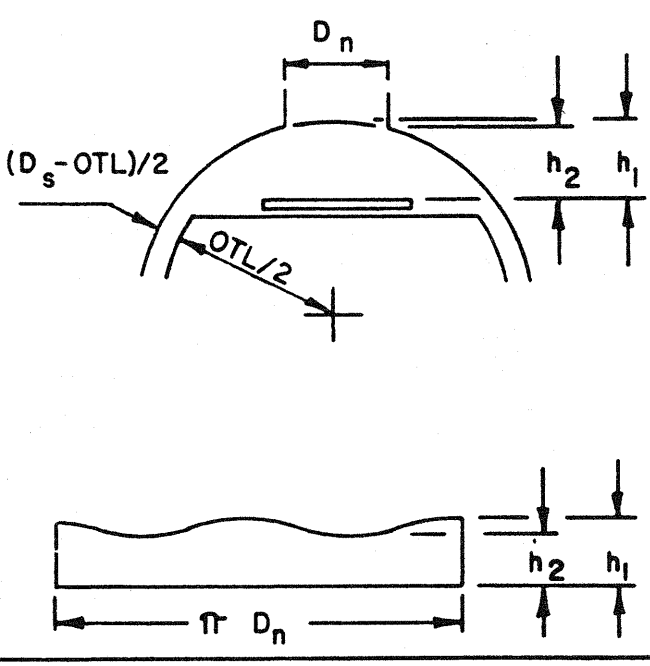

FIGURE RGP-RCB-4.6221
NO IMPINGEMENT PLATE – FULL LAYOUT

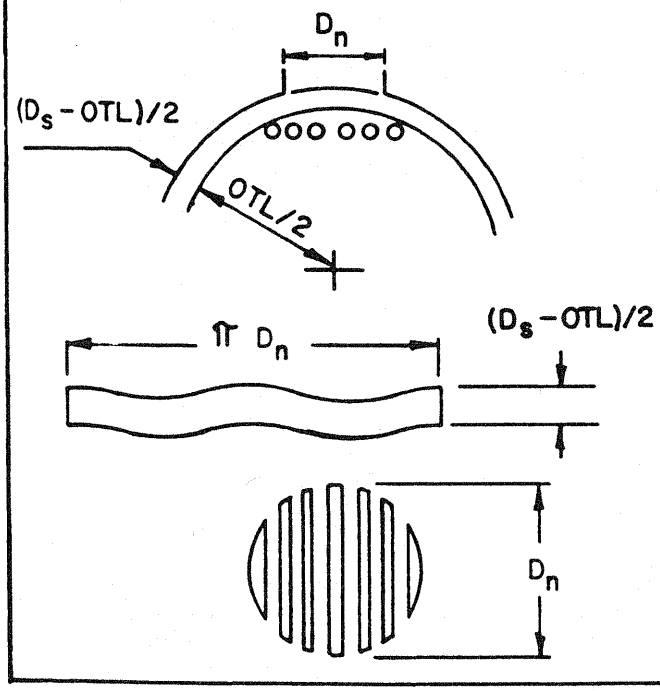

FIGURE RGP-RCB-4.6222
NO IMPINGEMENT PLATE – PARTIAL LAYOUT

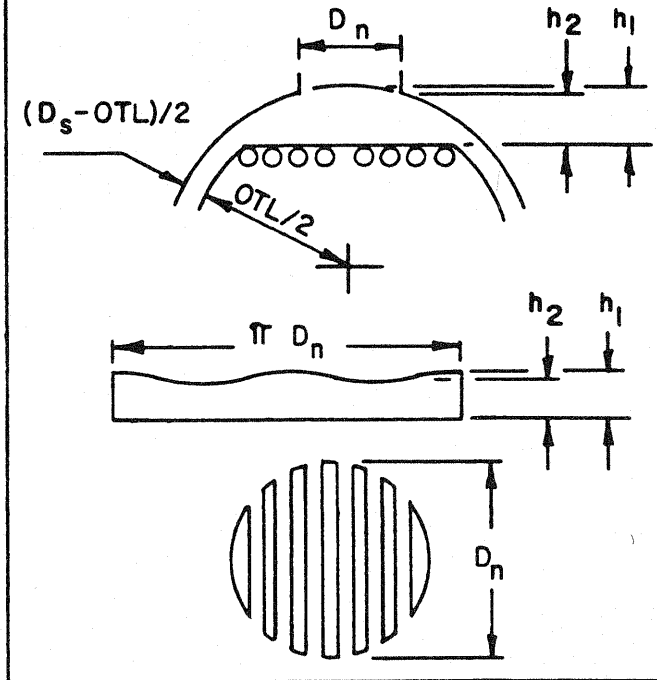

FIGURES RGP-RCB-4.6231 AND 4.6241

BUNDLE ENTRANCE OR EXIT AREA

FIGURE RGP-RCB-4.6231
PARTIAL LAYOUT- WITH OR WITHOUT IMPINGEMENT PLATE

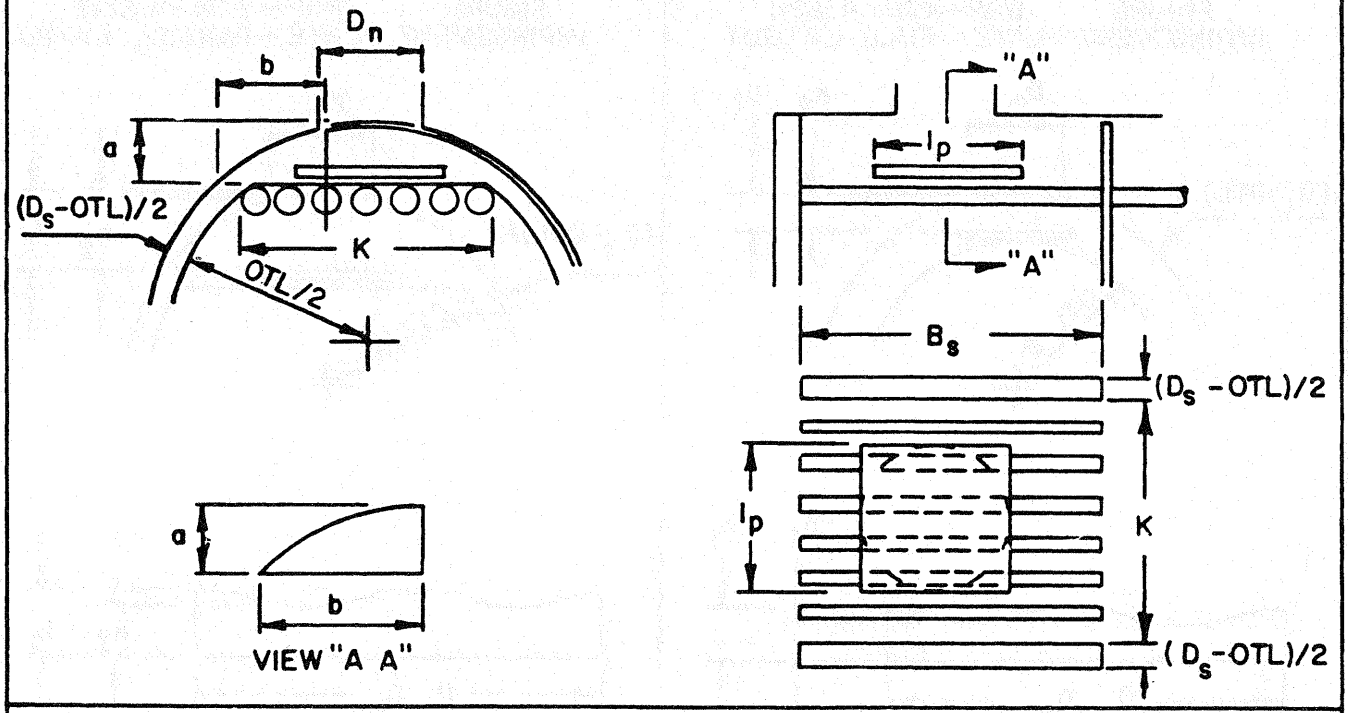

FIGURE RGP-RCB-4.6241
FULL LAYOUT - NO IMPINGEMENT PLATE

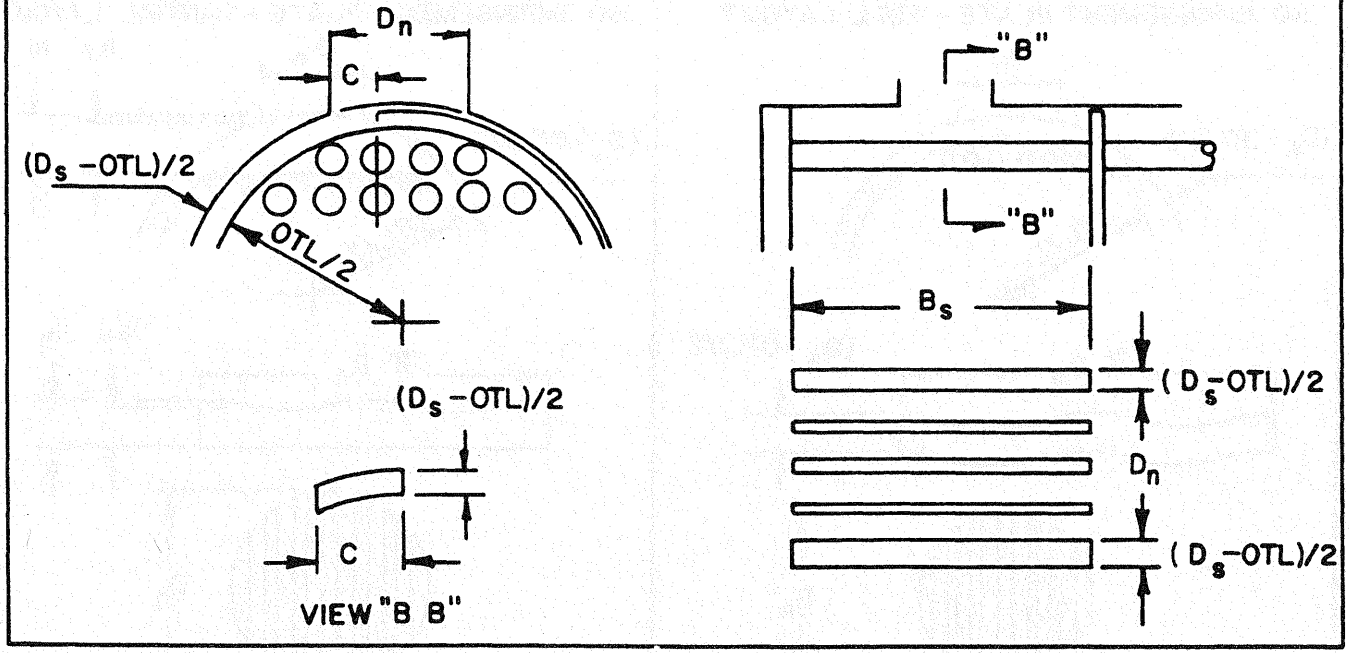

RGP-RCB-6 GASKETS

RGP-RCB-6.1 TYPE OF GASKETS

Gaskets made integral by welding are often harder in the welds than in the base material. Hardness limitations may be specified by the exchanger manufacturer.

RGP-RCB-7 TUBESHEETS

RGP-RCB-7.2 SHELL AND TUBE LONGITUDINAL STRESSES, FIXED TUBESHEET EXCHANGERS

The design of fixed tubesheets in accordance with Paragraph RCB-7.16 is based, in part, upon the tube bundle providing elastic support to the tubesheets throughout the tubed area. It is therefore important to insure that the tubes can provide sufficient staying action against tensile forces and sufficient stability against compressive forces. Paragraph RCB-7.2 provides rules to calculate the tube loads at the periphery of the bundle only. The tubes at the interior of the bundle are not considered, but can become loaded both in tension and compression. Tensile forces are generally not a problem if the requirements of Paragraph RCB-7.2 are met. Compressive forces might, however, create unstable conditions for tubes at the interior of the bundle. Typical conditions that can cause this are:

Loading: Tube side pressure and/or differential thermal expansion where the shell, if unrestrained, would lengthen more than the tubes. (Positive P_d per Paragraph RCB-7.161)

Geometry: Flexible tubesheet systems. Generally, those that are simply supported at the edge ($F = 1$ per Paragraph RCB-7.132) and have a value of F_q (Paragaph RCB-7.161) greater than 2.5.

Methods similar to those provided in the following references can be used to predict loadings on the tubes at the interior of the bundle:

(1) Gardner, K.A., "Heat Exchanger Tubesheet Design", Trans. ASME, Vol. 70, 1948, pp. A-377-385.

(2) Gardner, K.A., "Heat Exchanger Tubesheet Design-2: Fixed Tubesheets", Trans. ASME, Vol.74, 1952, pp. A-159-166.

(3) Miller, K.A.G., "Design of Tube Plates in Heat Exchangers", Proc. Inst. Mech. Eng., Ser. B, Vol. 1, 1952, pp. 215-231.

(4) Yu, Y.Y., "Rational Analysis of Heat-Exchanger Tube-Sheet Stresses", Trans. ASME, Vol. 78, 1956, pp. A-468-473.

(5) Boon, G.B. and Walsh, R.A., "Fixed Tubesheet Heat Exchangers", Trans. ASME, Vol. 86, Series E, 1964, pp. 175-180 (See also Gardner, K.A., discussion of above, Trans. ASME, Vol. 87, 1965, pp. 235-236).

(6) Gardner, K.A., "Tubesheet Design: A Basis For Standardization", Proceedings of the First International Conference on Pressure Vessel Technology: Part 1, Design and Analysis, pp. 621-648 and Part III, Discussion, pp. 133-135, ASME, 1969 and 1970.

(7) Chiang, C.C., "Close Form Design Solutions for Box Type Heat Exchangers", ASME 75-WA/DE-15.

(8) Hayashi, K., "An Analysis Procedure for Fixed Tubesheet Exchangers", Proceedings of the Third International Conference on Pressure Vessel Technology: Part 1, Analysis, Design and Inspection, pp. 363-373, ASME, 1977.

(9) Malek, R.G., "A New Approach to Exchanger Tubesheet Design", Hydrocarbon Processing, Jan. 1977.

(10) Singh, K.P., "Analysis of Vertically Mounted Through-Tube Heat Exchangers", ASME 77-JPGC-NE-19, Trans. ASME, Journal of Engineering for Power, 1978.

The allowable tube stresses and loads presented in Paragraph RCB-7.2 are intended for use with an analysis considering only the peripheral tubes. These allowable stresses and loads can be modified if the tubes at the interior of the bundle are included in the analysis. Engineering judgement should be used to determine that the bundle can adequately stay the tubesheets against tensile loadings and remain stable against compressive loadings.

RGP-RCB-7.4 TUBE HOLES IN TUBESHEETS

RGP-RCB-7.43 TUBE HOLE FINISH

Tube hole finish affects the mechanical strength and leak tightness of an expanded tube-to-tubesheet joint. In general:

(1) A rough tube hole provides more mechanical strength than a smooth tube hole. This is influenced by a complex relationship of modulus of elasticity, yield strength and hardness of the materials being used.

(2) A smooth tube hole does not provide the mechanical strength that a rough tube hole does, but it can provide a pressure tight joint at a lower level of wall reduction.

(3) Very light wall tubes require a smoother tube hole finish than heavier wall tubes.

(4) Significant longitudinal scratches can provide leak paths through an expanded tube-to-tubesheet joint and should therefore be removed.

RGP-RCB-7.5 TUBE WALL REDUCTION

The optimum tube wall reduction for an expanded tube-to-tubesheet joint depends on a number of factors. Some of these are:

(1) Tube hole finish

(2) Presence or absence of tube hole serrations (grooves)

(3) Tube hole size and tolerance

(4) Tubesheet ligament width and its relation to tube diameter and thickness

(5) Tube wall thickness

(6) Tube hardness and change in hardness during cold working

(7) Tube O.D. tolerance

(8) Type of expander used

(9) Type of torque control or final tube thickness control

(10) Function of tube joint, i.e. strength in resistance to pulling out, minimum cold work for corrosion purposes, freedom from leaks, ease of replacement, etc.

(11) Length of expanded joint

(12) Compatibility of tube and tubesheet materials

RGP-RCB-7.6 TESTING OF WELDED TUBE JOINTS

Tube-to-tubesheet welds are to be tested using the manufacturer's standard method.

Weld defects are to be repaired and tested.

Any special testing such as with halogens, or helium, will be performed by agreement between manufacturer and purchaser.

RGP-RCB-9 CHANNELS, COVERS, AND BONNETS

RGP-RCB-9.21 FLAT CHANNEL COVER DEFLECTION

The recommended limit for channel cover deflection is intended to prevent excessive leakage between the cover and the pass partition plate. Many factors govern the choice of design deflection limits. Some of these factors are: number of tube side passes; tube side pressure drop; size of exchanger; elastic springback of gasket material; effect of interpass leakage on thermal performance; presence or absence of gasket retaining grooves; and leakage characteristics of the tube side fluid.

The method shown in Paragraph RCB-9.21 for calculating deflection does not consider:

(1) The restraint offered by the portion of the cover outside the gasket load reaction diameter.

(2) Additional restraint provided by some types of construction such as full face gasket controlled metal-to-metal contact, etc.

(3) Cover bow due to thermal gradient across the cover thickness.

The recommended cover deflection limits given in Paragraph RCB-9.21 may be modified if other calculation methods are used which accomodate the effect of reduced cover thickness on the exchanger performance.

Reference:

Singh, K.P. and Solar, A.I., "Mechanical Design of Heat Exchangers and Pressure Vessel Components", First Edition (1984), Chapter 12, Arcturus Publishers, Inc.

RGP-RCB-10 NOZZLES

RGP-RCB-10.6 NOZZLE LOADINGS

For purposes of design, nozzle loads are assumed to be negligible, unless the purchaser specifically details such loads in his inquiry as indicated in Figure RGP-RCB-10.6.

FIGURE RGP-RCB-10.6

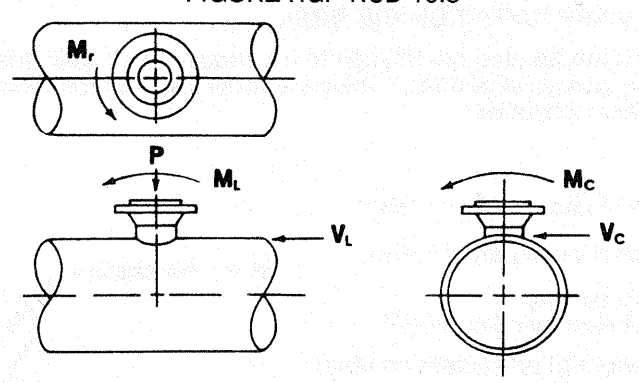

Since piping loads can impose forces and moments in three geometric planes, there is no one set of values which can be provided as a maximum by the manufacturer. Each piping load should be evaluated as a combination of forces and moments as specified by the purchaser.

Nozzle reactions from piping are transmitted to the pressure containment wall of the heat exchanger, and could result in an over-stressed condition in this area. The effects of piping loads transmitted through main body flanges, supports and other components should also be considered. For calculation of the combined stresses developed in the wall of the vessel due to piping and pressure loads, references are listed below.

References:

(1) Welding Research Council Bulletin No. 107, "Local Stresses in Spherical and Cylindrical Shells Due to External Loading", K. R. Wickman, A.G. Hopper and J.L. Mershon.

(2) "Stresses From Radial Loads and External Moments in Cylindrical Pressure Vessels", P.P. Bijlaard, The Welding Journal Research Supplement (1954-1955).

(3) "Local Stresses in Cylindrical Shells", Fred Forman, Pressure Vessel Handbook Publishing, Inc.

(4) Pressure Vessel and Piping Design Collected Papers, (1927-1959), The American Society of Mechanical Engineers, "Bending Moments and Leakage at Flanged Joints", Robert G. Blick.

(5) ASME Boiler and Pressure Vessel Code, Section III, "Nuclear Power Plant Components".

(6) Welding Research Council Bulletin No. 198, "Secondary Stress Indices for Integral Structural Attachments to Straight Pipe", W.G. Dodge.

(7) Welding Research Council Bulletin No. 297, "Local Stresses in Cylindrical Shells Due To External Loadings on Nozzles - Supplement to WRC Bulletin 107", J.L. Mershon, K.Mokhtarian, G.V. Ranjan and E.C. Rodabaugh.

RGP-RCB-11 END FLANGES AND BOLTING

RGP-RCB-11.5 LARGE DIAMETER LOW PRESSURE FLANGES

When designing a large diameter, low pressure flange, numerous considerations as described in Appendix S of the Code should be reviewed in order to reduce the amount of flange rotation. Another point of consideration is the fact that this type of flange usually has a large actual bolt area

compared to the minimum required area; the extra bolt area combined with the potential bolt stress can overload the flange such that excessive deflection and permanent set are produced. Methods are available to determine the initial bolt stress required in order to achieve a leak-free bolted joint. Once the required bolt stress is known, flange rotation and stress can then be calculated and, if necessary, the designer can take further action to reduce rotation and/or stresses.

RGP-RCB-11.6 BOLTING-ASSEMBLY AND MAINTENANCE

The following references may be used for assembly and maintenance of bolted flanged joints. See Paragraphs E-3.24 and E-3.25.

References:

(1) Torque Manual. Sturtevant-Richmont Division of Ryeson Corp.

(2) Crane Engineering Data, VC-1900B, Crane Company.

RGP-RCB-11.7 PASS PARTITION RIB AREA

Gasket pass partition rib area contributes to the required bolt load, therefore, its effects should be considered in the design of flanges. One acceptable method to include rib area is shown below. Other methods are acceptable.

Y' = Y value of pass partition rib(s)*

m' = m factor of pass partition rib(s)*

b_r = Effective seating width of pass partition rib(s)*

r_l = Total length of pass partition rib(s)*

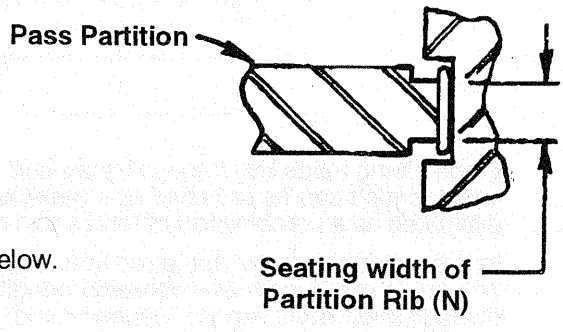

W_{m1} and W_{m2} = As defined in ASME Code Section VIII, Division 1 Appendix 2 and modified below.

$$W_{m2} = b\pi GY + b_r r_l Y'$$

$$H_p = 2P[b\pi Gm + b_r r_l m']$$

$$H = (G)^2(P)(0.7854)$$

$$W_{m1} = H + H_p$$

*Note:

(1) m and Y values for peripheral portion of gasket may be used if greater than m' & Y'.

(2) m and Y values are listed in ASME Code Section VIII Div. 1, Appendix 2 Table 2-5.1 or as specified by gasket manufacturer.

RGP-T-2 FOULING

RGP-T-2.1 TYPES OF FOULING

Currently five different types of fouling mechanisms are recognized. They are individually complex, often occurring simultaneously, and their effects may increase pressure drop, accelerate corrosion and decrease the overall heat transfer coefficient.

(1) Precipitation Fouling

Crystallization is one of the most common types of precipitation fouling. It occurs in many process streams, cooling water and chemical streams. Crystallization scale forms as the result of over-saturation of a relatively insoluble salt. The most common, calcium carbonate, forms on heat transfer surfaces as a result of the thermal decomposition of the bicarbonate ion and the subsequent reaction with calcium ions.

(2) Particulate Fouling

Sedimentation is the most common form of particulate fouling. Particles of clay, sand, silt, rust, etc. are initially suspended in the fluid and form deposits on the heat transfer surfaces. Sedimentation is frequently superimposed on crystallization and possibly acts as a catalyst for certain types of chemical reaction fouling.

(3) Chemical Reaction Fouling

Surface temperatures and the presence of oxidation promoters are known to significantly influence the rate of build up of this fouling type. Coking, the hard crust deposit of hydrocarbons formed on high temperature surfaces, is a common form of this type of fouling.

(4) Corrosion Fouling

Iron oxide, the most common form of corrosion product, is the result of an electro-chemical reaction and forms as a scale on iron-containing, exposed surfaces of the heat exchanger. This scale produces an added thermal resistance to the base metal of the heat transfer surface.

(5) Biological Fouling

Organic material growth develops on heat transfer surfaces in contact with untreated water such as sea, river, or lake water. In most cases, it will be combined or superimposed on other types of fouling such as crystallization and sedimentation. Biological growth such as algae, fungi, slime, and corrosive bacteria represent a potentially detrimental form of fouling. Often these micro-organisms provide a sticky holding medium for other types of fouling which would otherwise not adhere to clean surfaces.

RGP-T-2.2 EFFECT OF FOULING

There are different approaches to provide an allowance for anticipated fouling in the design of shell and tube heat exchangers. The net result is to provide added heat transfer surface area. This generally means that the exchanger is oversized for clean operation and barely adequate for conditions just before it should be cleaned. Although many heat exchangers operate for years without cleaning, it is more common that they must be cleaned periodically. Values of the fouling resistances to be specified are intended to reflect the values at the point in time just before the exchanger is to be cleaned. The major uncertainty is the assignment of realistic values of the fouling resistances. Further, these thermal resistances only address part of the impact of fouling as there is an increase in the hydraulic resistance as well; however, this is most often ignored. Fouling is complex, dynamic, and in time, degrades the performance of a heat exchanger.

The use of thermal resistance permits the assignment of the majority of the fouling to the side where fouling predominates. It also permits examination of the relative thermal resistance introduced by the different terms in the overall heat transfer coefficient equation. These can signal, to the designer, where there are potential design changes to reduce the effect of fouling. It also permits the determination of the amount of heat transfer surface area that has been assigned for fouling. Higher fouling resistances are sometimes inappropriately specified to provide safety factors to account for uncertainties in the heat transfer calculation, the actual operating conditions, and/or possible plant expansion. These uncertainties may well exist and should be reflected in the design, but they should not be masked in the fouling resistances. They should be clearly identified as appropriate factors in the design calculations.

Another inappropriate approach to heat exchanger design is to arbitrarily increase the heat transfer surface area to allow for fouling. This over-surfacing avoids the use of the appropriate fouling resistances. In effect, the fouling for the exchanger is combined and no longer can be identified as belonging to one side or the other.

In order to examine the effect of fouling on the pressure drop, it is necessary for the purchaser to supply the anticipated thicknesses of each of the fouling layers.

RGP-T-2.31 PHYSICAL CONSIDERATIONS

A) Properties Of Fluids And Usual Propensity For Fouling

The most important consideration is the fluid and the conditions when it produces fouling. At times, a process modification can result in conditions that are less likely to cause fouling.

B) Surface And Bulk Temperatures

For many kinds of fouling, as the temperatures increase, the amount of fouling increases. Lower temperatures produce slower fouling build-up and deposits that often are easier to remove.

C) Local Velocities

Normally, keeping the velocities high reduces the tendency to foul. Velocities on the tube side are limited by erosion, and on the shell side by flow-induced vibration. Stagnant and recirculation regions on the shell side lead to heavy fouling.

D) Tube Material, Configuration And Surface Finish

The selection of tube material is significant when it comes to corrosion. Some kinds of biological fouling can be lessened by copper-bearing tube materials. There can be differences between finned and plain tubing. Surface finish has been shown to influence the rate of fouling and the ease of cleaning.

E) Heat Exchanger Geometry And Orientation

The geometry of a particular heat exchanger can influence the uniformity of the flows on the tube side and the shell side. The ease of cleaning can be greatly influenced by the orientation of the heat exchanger.

F) Heat Transfer Process

The fouling resistances for the same fluid can be considerably different depending upon whether heat is being transferred through sensible heating or cooling, boiling, or condensing.

G) Fluid Purity And Freedom From Contamination

Most fluids are prone to have inherent impurities that can deposit out as a fouling layer, or act as catalysts to the fouling processes. It is often economically attractive to eliminate the fouling constituents by filters.

H) Fluid Treatment To Prevent Corrosion And Biological Growth

Fluid treatment is commonly carried out to prevent corrosion and/or biological growth. If these treatments are neglected, rapid fouling can occur.

I) Fluid Treatment To Reduce Fouling

There are additives that can disperse the fouling material so it does not deposit. Additives may also alter the structure of the fouling layers that deposit so that they are easily removed. The use of these treatments is a product quality and economic decision.

J) Cathodic Protection

One of the effective ways to reduce the possibility of corrosion and corrosion fouling is to provide cathodic protection in the design.

K) Planned Cleaning Method And Desired Frequency

It is important that the cleaning method be planned at the design stage of the heat exchanger. Considerations in design involving cleaning are whether it will be done on-line, off-line, bundle removed or in place, whether it will involve corrosive fluids, etc.. Access, clearances, valving, and piping also must be considered to permit ease of cleaning. The cleaning method may require special safety requirements, which should be incorporated in the design.

L) Place The More Fouling Fluid On The Tube Side

There are two benefits from placing the more fouling fluid on the tube side. There is less danger of low velocity or stagnant flow regions on the tube side, and, it is generally easier to clean the tube side than the shell side. It is often possible to clean the tube side with the exchanger in place while it may be necessary to remove the bundle to clean the shell side.

RGP-T-2.32 ECONOMIC CONSIDERATIONS

Planned fouling prevention, maintenance and cleaning make possible lower allowances for fouling, but do involve a commitment to ongoing costs. The amount and frequency of cleaning varies considerably with user and operation.

The most significant parameters involved in deciding upon the amount of fouling allowance that should be provided are the operational and economic factors that change with time. New fluid treatments, changing first costs and operating costs, different cleaning procedures and the degree of payback for longer periods of being on stream should be some of the items evaluated in determining an appropriate fouling resistance. Failure to include the economic considerations may lead to unnecessary monetary penalties for fouling.

Companies concerned about fouling continually monitor the performance of their heat exchangers to establish fouling experience and develop their own guidelines for determining the appropriate fouling resistance to specify when purchasing new equipment.

Almost every source of cooling water needs to be treated before it is used for heat exchanger service. The treatment ranges from simple biocide addition to control biological fouling, to substantial treatment of brackish water to render it suitable for use. The amount of treatment may be uneconomical and substitute sources of cooling must be sought. With today's technology, the quality of water can be improved to the point that fouling should be under control as long as flow velocities are maintained and surface temperatures controlled.

RGP-T-2.4 DESIGN FOULING RESISTANCES (HR FT^2 ° F/Btu)

The purchaser should attempt to select an optimal fouling resistance that will result in a minimum sum of fixed, shutdown and cleaning costs. The following tabulated values of fouling resistances allow for oversizing the heat exchanger so that it will meet performance requirements with reasonable intervals between shutdowns and cleaning. These values do not recognize the time related behavior of fouling with regard to specific design and operational characteristics of particular heat exchangers.

Fouling Resistances For Industrial Fluids

Oils:	
Fuel Oil #2	0.002
Fuel Oil #6	0.005
Transformer Oil	0.001
Engine Lube Oil	0.001
Quench Oil	0.004
Gases And Vapors:	
Manufactured Gas	0.010
Engine Exhaust Gas	0.010
Steam (Non-Oil Bearing)	0.0005
Exhaust Steam (Oil Bearing)	0.0015-0.002
Refrigerant Vapors (Oil Bearing)	0.002
Compressed Air	0.001
Ammonia Vapor	0.001
CO_2 Vapor	0.001
Chlorine Vapor	0.002
Coal Flue Gas	0.010
Natural Gas Flue Gas	0.005
Liquids:	
Molten Heat Transfer Salts	0.0005
Refrigerant Liquids	0.001
Hydraulic Fluid	0.001
Industrial Organic Heat Transfer Media	0.002
Ammonia Liquid	0.001
Ammonia Liquid (Oil Bearing)	0.003
Calcium Chloride Solutions	0.003
Sodium Chloride Solutions	0.003
CO_2 Liquid	0.001
Chlorine Liquid	0.002
Methanol Solutions	0.002
Ethanol Solutions	0.002
Ethylene Glycol Solutions	0.002

Fouling Resistances For Chemical Processing Streams

Gases And Vapors:	
Acid Gases	0.002-0.003
Solvent Vapors	0.001
Stable Overhead Products	0.001
Liquids:	
MEA And DEA Solutions	0.002
DEG And TEG Solutions	0.002
Stable Side Draw And Bottom Product	0.001-0.002
Caustic Solutions	0.002
Vegetable Oils	0.003

Fouling Resistances For Natural Gas-Gasoline Processing Streams

Gases And Vapors:	
Natural Gas	0.001-0.002
Overhead Products	0.001-0.002
Liquids:	
Lean Oil	0.002
Rich Oil	0.001-0.002
Natural Gasoline And Liquified Petroleum Gases	0.001-0.002

Fouling Resistances For Oil Refinery Streams

Crude And Vacuum Unit Gases And Vapors:						
Atmospheric Tower Overhead Vapors						0.001
Light Naphthas						0.001
Vacuum Overhead Vapors						0.002
Crude And Vacuum Liquids:						
Crude Oil						
	0 to 250 ° F VELOCITY FT/SEC			250 to 350 ° F VELOCITY FT/SEC		
	<2	2-4	>4	<2	2-4	>4
DRY	0.003	0.002	0.002	0.003	0.002	0.002
SALT*	0.003	0.002	0.002	0.005	0.004	0.004
	350 to 450 ° F VELOCITY FT/SEC			450 ° F and over VELOCITY FT/SEC		
	<2	2-4	>4	<2	2-4	>4
DRY	0.004	0.003	0.003	0.005	0.004	0.004
SALT*	0.006	0.005	0.005	0.007	0.006	0.006
*Assumes desalting @ approx. 250 ° F						
Gasoline						0.002
Naphtha And Light Distillates						0.002-0.003
Kerosene						0.002-0.003
Light Gas Oil						0.002-0.003
Heavy Gas Oil						0.003-0.005
Heavy Fuel Oils						0.005-0.007
Asphalt And Residuum:						
Vacuum Tower Bottoms						0.010
Atmosphere Tower Bottoms						0.007
Cracking And Coking Unit Streams:						
Overhead Vapors						0.002
Light Cycle Oil						0.002-0.003
Heavy Cycle Oil						0.003-0.004
Light Coker Gas Oil						0.003-0.004
Heavy Coker Gas Oil						0.004-0.005
Bottoms Slurry Oil (4.5 Ft/Sec Minimum)						0.003
Light Liquid Products						0.002

Fouling Resistances For Oil Refinery Streams- continued

Catalytic Reforming, Hydrocracking And Hydrodesulfurization Streams:	
Reformer Charge	0.0015
Reformer Effluent	0.0015
Hydrocracker Charge And Effluent*	0.002
Recycle Gas	0.001
Hydrodesulfurization Charge And Effluent*	0.002
Overhead Vapors	0.001
Liquid Product Over 50 ° A.P.I.	0.001
Liquid Product 30 - 50 ° A.P.I.	0.002
*Depending on charge, characteristics and storage history, charge resistance may be many times this value.	
Light Ends Processing Streams:	
Overhead Vapors And Gases	0.001
Liquid Products	0.001
Absorption Oils	0.002-0.003
Alkylation Trace Acid Streams	0.002
Reboiler Streams	0.002-0.003
Lube Oil Processing Streams:	
Feed Stock	0.002
Solvent Feed Mix	0.002
Solvent	0.001
Extract*	0.003
Raffinate	0.001
Asphalt	0.005
Wax Slurries*	0.003
Refined Lube Oil	0.001
*Precautions must be taken to prevent wax deposition on cold tube walls.	
Visbreaker:	
Overhead Vapor	0.003
Visbreaker Bottoms	0.010
Naphtha Hydrotreater:	
Feed	0.003
Effluent	0.002
Naphthas	0.002
Overhead Vapors	0.0015

Fouling Resistances for Oil Refinery Streams - continued

Catalytic Hydro Desulfurizer:	
Charge	0.004-0.005
Effluent	0.002
H.T. Sep. Overhead	0.002
Stripper Charge	0.003
Liquid Products	0.002
HF Alky Unit:	
Alkylate, Deprop. Bottoms, Main Fract. Overhead Main Fract. Feed	0.003
All Other Process Streams	0.002

Fouling Resistances For Water

Temperature Of Heating Medium	Up To 240° F		240 to 400° F	
Temperature Of Water	125 ° F		Over 125° F	
	Water Velocity Ft/Sec		Water Velocity Ft/Sec	
	3 and Less	Over 3	3 and Less	Over 3
Sea Water	0.0005	0.0005	0.001	0.001
Brackish Water	0.002	0.001	0.003	0.002
Cooling Tower And Artificial Spray Pond:				
Treated Make Up	0.001	0.001	0.002	0.002
Untreated	0.003	0.003	0.005	0.004
City Or Well Water	0.001	0.001	0.002	0.002
River Water:				
Minimum	0.002	0.001	0.003	0.002
Average	0.003	0.002	0.004	0.003
Muddy Or Silty	0.003	0.002	0.004	0.003
Hard (Over 15 Grains/Gal.)	0.003	0.003	0.005	0.005
Engine Jacket	0.001	0.001	0.001	0.001
Distilled Or Closed Cycle				
Condensate	0.0005	0.0005	0.0005	0.0005
Treated Boiler Feedwater	0.001	0.0005	0.001	0.001
Boiler Blowdown	0.002	0.002	0.002	0.002

If the heating medium temperature is over 400 ° F and the cooling medium is known to scale, these ratings should be modified accordingly.

A

Acoustic Resonance or Coupling 95, 117
Air Test 24
Allowable Working Pressure of Tubes 233, 234, 235
Alloy, TEMA Definition 23
Alloy Clad Tubesheets 45, 74
Alloy Shells, Minimum Thickness 30
Anodes 26
Area,
  Bundle Entrance and Exit 35, 274-278
  Segments of Circles 248
ASME Code Data Reports 14

B

B Class Heat Exchanger, Definition 23
Backing Devices 38, 39
Baffles and Support Plates, ... 31
  Cross, Clearances 31, 32
  Cross, Minimum Thickness 32, 33
  Cuts 31
  Holes 31, 122
  Impingement 35
  Longitudinal 33
  Spacing 33, 34
  Special Cases 34
  Special Precautions 33
  Type 31
Bolted Joints 19
Bolting,
  Dimensional Data 188, 189
  End Flanges 93, 281, 282
  Foundation 17
  Internal Floating Head 38, 39
  Pass Rib Area 282
  Size and Spacing 93
  Tightening 19
  Type 94
Bundle Cleaning 21, 22
Bundle Entrance and Exit Area 35
Bundle Hold Down 36, 37
By-Pass Valves 18

C

C Class Heat Exchanger, Definition 23
Cast Iron, Service Limitation 25
Channel Covers 88, 280, 281
Channel Cover Formula 90
Channel Cover Grooves 90
Channel Pass Partitions 88, 89
Channels, Minimum Thickness 88
Channels, Type Designation & Size Numbering 1, 2
Circular Rings and Discs,
  Weights of 242-247
Circular Segments, Areas of 248
Cleaning Heat Exchangers 18, 21, 22
Cleanliness, Inspection 15, 19
Cleanliness Provisions 17
Clearance, Cross Baffles & Support Plates 32
Clearance, Wrench & Nut 188, 189
Code Data Reports 14
Compressibility Charts, Generalized Gas 156, 157, 158
Compressibility, Gas 150
Connections,
  Pressure Gage 91
  Protection 17
  Stacked Units 91, 92
  Thermometer 91
  Vent and Drain 56, 91
Consequential Damages 14
Construction Codes 23
Conversion Factors 169, 175, 249, 250
Correction Factors for Mean Temperature
  Difference 134-146
Correction Factors for Bolting Moment 93
Corrosion and Vibration 14
Corrosion Allowance 24, 25
Counterflow Exchangers 127, 133, 147
Covers,
  Channel 88, 280, 281
  Floating Head 38, 39, 40
  Shell 31
Critical Properties 152, 182
Cross Baffles 31-34

D

Damages, Consequential 14
Data Reports 14
Defective Parts 14
Definitions 10
Density,
  Gases 150, 156, 157, 158
  Liquids 150, 154, 155
Design Conditions 18
Design Pressures 23
Design Temperatures 24
Diameters,
  Baffle and Support Plate, Tube Holes 31
  Tubesheet Holes 70, 71
Dimensions,
  Bolting 188, 189
  Fittings, Welding 185
  Flanges, ASME 186, 187
  Pipe, Welded and Seamless 184
  Tubing 230, 231
Dirt Removal 17
Disassembly for Inspection 20
Dismantling Clearance 17
Double Tubesheets 55-62
Drain Connections 18, 56, 91
Draining Exchangers 18, 20
Drawings 13, 14
Drift Tolerance, Tube Hole Drill 72, 73
Drilling Tolerance, Tubesheets 71

E

Elasticity, Modulus of 236, 237
End Flanges 25, 93, 94, 281, 282
Entrance & Exit Areas, Tube Bundles 35, 274-278
Exchangers (See Heat Exchanger)
Expansion Joints, Shell 62
Expansion, Mean Coefficients of Thermal 238, 239
Expanded Tube Joints 22, 72, 73, 280

F

Fabrication Inspection 13
Fabrication Tolerances 6-9
Facilities for Cleaning Heat Exchangers 21, 22
Finish, Tube Holes 70, 280
Fittings, Dimensions of Welding 185
Fixed Tubesheets 46, 53, 62-70
Flanges,
  End 25, 93, 94, 281, 282
  ASME Standard 186, 187
  Bolt Clearances 188, 189
  Split Type 92
  Pressure-Temperature Rating 190-229
  Protection 15
Flexible Shell Elements 75-88
Floating Heads, ... 38
  Backing Devices 38, 39
  Packed 40, 41, 42
  Internal 38, 39, 40
  Nomenclature 3
  Outside Packed 40, 41, 42
  Packed Lantern Ring 42
  Tube Bundle Supports 40
Floating Tubesheet 21, 53, 55
Fluid Density 150, 154, 158
Fluid Temperature Relations 126, 127
Fouling,
  Economics of 126, 285
  Effect of 126, 283, 284
  Indication of 19
Fouling Resistance,
  Chemical Processing Streams 287
  Industrial Fluids 286
  Natural Gas-Gasoline Processing Streams 287
  Oil Refinery Streams 288, 289, 290
  Water 290
Foundation Bolts 17
Foundations 17

G

Gages, Standard Diameters 27
Gaskets (Peripheral & Pass Partition) 43
  Material 43
  Replacement 22
  Joint Details 43, 44
General Construction Features 15, 16
Generalized Compressibility Charts 156, 157, 158
Grooved Channel Covers 90
Grooved Tube Holes 71
Grooved Tubesheets 74
Guarantees 14, 15

H

Handling Tube Bundles 21
Hardness Conversion Table 232
Heat Content Petroleum Fractions 151, 167
Heat Exchanger Arrangement Diagrams, ... 2-5
  Parts and Nomenclature 3, 4, 5
  Standard Dimension Tolerance 6-9
Heat Transfer 124
Heat Treatment, U-Tubes 28
Holes, ... 70
  Baffles and Support Plates 31, 122
  Diameter and Tolerance, Tube 70, 71
  Finish, Tube 70, 280
  Grooving 71
Hydrostatic Test Pressure 23

I

Impingement Baffles,
  Bundle Entrance and Exit Areas 35
  Protection Requirements 35
  Shell and Tube Side 35
Inspection, Cleanliness 15, 19
Inspection, Fabrication 13
Installation of Heat Exchangers 17, 18
Internal Floating Heads 38, 39, 40

J

Jacketed Gaskets 43
Joints,
  Bolted 19
  Packed, Service Limitations 40, 41, 42

K

Kettle Type Reboiler, Typical Illustration 2, 5

L

Latent Heats of Various Liquids 168
Leaks, Locating 20, 21
Leveling Heat Exchangers 17
Lifting Devices 16, 269-272
Ligaments, Tubesheets Minimum 70, 72, 73
Load Concentration Factor, Flanges 93
Longitudinal Baffles 33

M

Maintenance of Heat Exchangers 19-22
Material Warranties 14
Materials- Definition of Terms 23
Mean Coefficients of Thermal Expansion 238, 239
Mean Metal Temperature 24, 128, 129, 130
Mean Temperature Difference 126, 127, 133
  (See also MTD)
Metal Resistance, Finned & Bare Tubing 125
Metal Temperature Limitations 24
Minimum Inside Depth Channels & Bonnets 88
Minimum Inside Depth Floating Heads 38
Modulus of Elasticity 236, 237
MTD Correction Factors 134-146

N

Name Plates 13
Natural Frequencies, Tubes 97
Nomenclature of Heat Exchanger Components 3
Nomenclature 1-5
Nozzles,
  Connections 91
  Floating Head 40
  Loadings 92, 281
  Split Flanges 92
Number and Size of Tie Rods 35, 36

O

Operation of Heat Exchangers 18, 19
Operating Procedures 18, 19
Outside Packed Floating Head 40, 41, 42

P

Packed Floating Heads 40, 41, 42
Packing Boxes 26, 40, 41
Packing Material 42
Parts, Replacement 15, 22
Pass Partition Grooves 74, 90
Pass Partition Plates 88, 89
Pass Partition Rib Area 282
Performance Failures 17
Performance Guarantees 14
Periodic Inspection 19, 20
Physical Properties of Fluids 150
Pipe,
  Dimensions of Welded and Seamless 184
  Shells 30
Pipe Tap Connections 91
Piping Loads 92, 281
Pitch, Tubes 28, 29
Plate, Shells 30
Plugging Tubes in Tube Bundles 22, 273
Postweld Heat Treatment,
  Floating Head Covers 38
  Channels and Bonnets 89
Preparation of Heat Exchanger for Shipment 15
Pressure Gage Connection 91
Pressure Loss 126
Pressure-Temperature Ratings for Valves, Fittings,
  and Flanges 190-229
Pressure, Tube Working 232-235
Protection,
  Impingement 35
  Shipment 15
Pulling Mechanisms 21, 74
Pulsating Fluids 18, 89

R

R Class Heat Exchanger, Definition 23
Ratings, Valves, Fittings, and Flanges
  (See Pressure-Temperature Ratings)
Reboiler, Kettle Type, Illustration 5
Recommended Good Practice, RGP Section 252
Replacement Parts 15
Removing Tube Bundles 21
Ring Flanges, Split 92
Rings, Weights of 242-247

S

Safety Relief Devices 18
Sealing Devices 36
Seamless Pipe, Dimensions of 184
Segments, Circular 248
Seismic Design 16, 253-268
Shell Covers, Minimum Thickness 31
Shells,
  Diameters 30
  Illustrations 2-5
  Longitudinal Stress 67, 68
  Minimum Thickness 30
  Size Numbering & Type Designation 1, 2
  Tolerances 30
Shipment, Preparation of Units 15
Shop Operation 13
Shutting Down Operation 18
Size Numbering of Heat Exchangers 1
Spacers and Tie Rods 35, 36
Spare Parts 15, 22, 44
Specific Gravity, ... 150
  Hydrocarbon Liquids 54, 155
Specific Heat, ... 150, 151
  Gases, Miscellaneous, Atmospheric Pressure 165
  Gases at High Pressure 150, 151, 166
  Hydrocarbon Gases,
    Atmospheric Pressure 150, 161, 162, 163
  Liquids, Miscellaneous 150, 164
  Petroleum Fractions, Liquid 150, 159
  Petroleum Fractions, Vapor 150, 160
Specification Sheet, Exchanger 11, 12
Split Type Nozzle Flanges 92
Stacked Units 91, 92
Starting Operation 18
Stress Relieving (See Postweld Heat Treatment)
Support Plates,
  Holes 31
  Spacing 33, 34, 121
  Thickness 32, 33
Supports 6, 7, 15, 16, 253-268

T

Temperature,
  Limitations, Metal 24
  Multipass Flow 127
  Shocks 19
Temperature Efficiency, ... 27, 128
  Counterflow Exchangers 147
  1 Shell Pass 148
  2 Shell Passes 149
Test Connections 18
Test, Pneumatic or Liquid 23, 24
Test, Standard 23, 24
Test Ring 21
Thermal Conductivity, ... 240, 241
  Conversion Factors 169, 249, 250
  Gases and Vapors, Miscellaneous 172
  Liquids, Miscellaneous 171
  Liquid Petroleum Fractions 170
  Metals 240, 241
  Pressure Correction 173, 174
  Pure Hydrocarbon Liquids 170
Thermal Expansion, Mean Coefficients of, Metals 238, 239
Thermal Performance Test 14
Thermal Resistance of Uniform Deposits (See Fouling)
Thermal Relations 124
Thermometer Connections 91

Thickness, Minimum,
Baffles 32, 33
Channels and Bonnets 88
Channel Covers 90, 280, 281
Shells and Shell Covers 30, 31
Tubes 27, 28
Tubesheets 45
Tie Rods and Spacers, Number and Size 35, 36
Tolerances,
Tube Holes in Tubesheets 70, 71
Tube Holes in Baffles 31
Heat Exchangers and Parts 6-9
Shells and Shell Covers 30
Tubesheet Drilling 70, 71
Tube Bundles,
Cleaning 18, 21, 22
Handling 21
Plugging Tubes 22, 273
Removal 21
Supports 40
Vibration 14, 95-123
Tube Expanding 22
Tube Joints,
Expanded 22, 72, 73, 280
Loads 69, 70
Testing, Welded 280
Welded 74
Tube Support Plate Drilling 31
(See Also Support Plates)
Tube Wall Metal Resistance 125
Tube Working Pressure, Internal 233, 234, 235
Tubes,
Characteristics 230, 231
Compressive Stress 69
Diameters and Gages 27
Expanding 22
Finned 27
Leaks 20, 21
Length 27
Longitudinal Stress 67, 68
Maximum Recommended Gages 27, 72, 73
Natural Frequencies 97
Pattern 28, 29
Pitch 29
Plugging in Tube Bundles 273
Projection 73
Special Precautions 67
Tube Wall Reduction 280
U-Tubes 28, 96, 104
Unsupported Length, Maximum 33, 34
Working Pressure, Internal 233, 234, 235
Tubesheets, ... 45
Application Instructions & Limitations 45
Applied Facings 45
Clad & Faced Tubesheets 45
Divided Floating Heads 46
Double Tubesheets 55-62
Effective Tubesheet Thickness 45
Fixed Tubesheets 46, 53, 62-70
Fixed Tubesheets of Differing Thickness 66, 67
Formulae,
Bending 46-49
Effective Design Pressures-Floating Head (Type P) 55
Effective Differential Design Pressure 65, 66
Effective Shell Side Design Pressure 64, 65
Effective Tube Side Design Pressure 65
Equivalent Bolting Pressure 63, 64
Tubesheets, Formulae, (continued)
Equivalent Differential Expansion Pressure 62, 63
Flanged Extension 53, 54
Shear 50, 51, 52
Shell Longitudinal Stress 67, 68, 279
Tube Allowable Compressive Stress 69
Tube Longitudinal Stress ..... , 68, 69, 279
Tube-to-Tubesheet Joint Loads 69, 70
Integrally Clad 45
Minimum Thickness 45
Packed Floating Tubesheet Type
Exchangers 40, 41, 42
Shell and Tube Longitudinal Stresses 67, 68, 69
Special Cases 70
Tube Holes in Tubesheets 70, 71
Tube Joints-Expanded & Welded 22, 74, 280
Tubesheet Pass Partition Grooves 74
Tubesheet Pulling Eyes 74
Type Designation of Heat Exchangers 1, 2

U

Unsupported Tube Length, Maximum 33, 34
U-Tubes, ... 28
Rear Support 34
Heat Treatment 28
Users Note viii

V

Vent & Drain Connections 18, 56, 91
Vibration, ... 14, 34, 35, 95-123
Acoustic Resonance or Coupling 95, 116
Mechanisms Causing 95
Designs & Considerations 121, 122
Selected References 122, 123
Tube Excitation 97, 98, 99
Tube Natural Frequencies 97, 98, 99
Turbulent Buffeting 116, 117
Vortex Shedding 116
Viscosity, ... 151
Conversion Factors 151, 175, 249, 250
Gases & Vapors, Atmospheric Pressure 181
Gases & Vapors, High Pressure 151, 182
Hydrocarbons & Petroleum Fractions 176-179
Liquids, Miscellaneous 180

W

Wall Resistance, Finned & Bare Tubes 125
Water Fouling Resistances 290
Weights of Circular Rings & Discs 242-247
Weights of Tubing 230, 231
Welded and Seamless Pipe, Dimensions of 184
Welded Tube Joints 74, 280